CITY OF ELKO NEW MARKET
CITY COUNCIL WORK SESSION AGENDA
CITY OF ELKO NEW MARKET
601 MAIN STREET
ELKO NEW MARKET, MINNESOTA
THURSDAY, MARCH 8, 2018

6:30 PM

1. **Call to Order**

2. **Presentations**

3. **Reports**

4. **General Discussion**
    a. Sketch Plan Review of Proposed PUD Zoning & Preliminary Plat, Barsness 1st Addition

5. **Reports (Cont'd)**
    a. Reports from the Business Agenda may be presented if time permits

6. **Adjournment**

601 Main Street
Elko New Market, MN 55054
phone: 952-461-2777 fax: 952-461-2782

MEMORANDUM

TO: WARREN BARSNESS, DALE RUNKLE, JOEL COOPER

FROM: RENEE CHRISTIANSON, COMMUNITY DEVELOPMENT SPECIALIST

SUBJECT: SKETCH PLAN REVIEW OF PROPOSED REZONING FROM B1 TO PUD, AND PRELIMINARY PLAT APPROVAL OF BARSNESS 1ST ADDITION, CONSISTING OF 3 LOTS ON 10 GROSS ACRES.

DATE: FEBRUARY 27, 2018

PLANNING COMMISSION MEETING:	MARCH 6, 2018
CITY COUNCIL MEETING:	MARCH 8, 2018 (TENTATIVE)
60-DAY REVIEW DEADLINE:	APRIL 10, 2018
120-DAY REVIEW DEADLINE:	JUNE 9, 2018

Background / History

The City has been working with Warren Barsness regarding a possible commercial development located at the southeast quadrant of Co Rd 2 and Co Rd 91 for a number of years. City staff had received concept plan drawings during July of 2016 and provided staff level comments to Mr. Barsness and his development team at that time. (Preliminary comments supplied to Mr. Barsness in August of 2016 are attached.) Mr. Barsness has now submitted an application for Sketch Plan review of a proposed Planned Unit Development. A Sketch Plan review of the PUD is being required to seek Planning Commission input on the project.

Submitted for City review on January 4, 2018 was an 8-page civil plan set prepared by James R. Hill, a 4-page plan set prepared by Appro Development, and a concept image. The plan sets contained the following sheets:

- Title Sheet – 12/29/17
- Existing Conditions Drawing - 12/29/17
- Preliminary Plat Drawing – 12/27/17
- Preliminary Erosion & Sediment Control Plan – 12/29/17
- Preliminary Grading & Drainage Plan – 12/29/17
- Preliminary Utility Plan – 12/29/17
- Preliminary Paving & Dimensional Plan – 12/29/17
- Detail Plates – 12/29/17
- Landscaping Plan 12/22/17
- Lighting Plan – 12/11/17
- Concept Floor Plan 11/29/17
- Concept Elevations / Building Renderings 11/29/17

- Concept Building & Site image – 12/13/17

The information submitted indicates that the developer will be applying to rezone the property from B-1, Neighborhood Business, to Planned Unit Development to allow for a commercial development containing a combination gas station and grocery/convenience store containing approximately 7,956 square feet, a 1,920 square foot car-wash containing two drive-through bays, and an attached 2-story speculative office, retail and storage building containing approximately 19,248 square feet. Also proposed is a plat containing three lots, Barsness 1st Addition.

Legal Description

The property proposed for development consists of a ten-acre parcel currently described by metes and bounds, as follows:

> The West 660.00 feet of the North 660.00 feet of the Northwest Quarter of Section 27, Township 113, Range 21, Scott County, Minnesota; subject to road easements over the west 33.00 feet and the North 33.0 feet thereof. (Parcel ID 23-927006-2)

The property will need to be platted prior to development. The applicant is proposing to plat the property into three separate lots.

Neighborhood Conditions

To the north of the property is undeveloped farm land. To the east is a large DNR protected wetland area, and the post office and racetrack beyond the wetland. To the south is undeveloped property. To the west is a vacant lot and single family residential development. The proposed development seems generally compatible with the surrounding land uses.

Comprehensive Land Use Plan

The City's 2030 Comprehensive Land Use Plan guides the property to a "Town Center" land use designation. The comprehensive plan contains the following language regarding Town Center:

"This classification is a special designation for the recognized traditional Town Centers which have retained attributes of a "downtown" and provide a sense of place based on historic nature and character elements, which include awnings, street lighting, signage, etc. This classification strives to balance the civic center and contemporary commercial features with new cultural focused institutions and enterprises, and redevelopment potential of retail and service uses. The Town Center may be characterized as a service hub with limited retail shopping convenience. Pedestrian circulation within, as well as to the area will be a distinguishing feature. New development can provide for limited residential uses, excluding single family detached dwellings, and can be integrated with the commercial and service environment. Convalescent care facilities and congregate senior citizen housing are appropriate uses at selected locations."

The proposed use of the property meets the intent of the guided land use for the area. Based on the above description, design features of a traditional downtown should be incorporated into the site and building façade. Pedestrian circulation to and within the site will be an important design element.

Zoning

The property is currently located in the City limits and zoned Neighborhood Business District (B1). The purpose of the B1 district is to provide for the establishment of local centers for convenient, limited office, retail or service outlets which deal directly with the customer for whom the goods or services are furnished.

Motor fuel stations, commercial car washes, professional and commercial offices are allowed in the B1 district with an approved conditional use permit. Numerous retail uses are also listed as permitted uses within the district, as well as restaurants within a building having another principal use.

The applicant is proposing to rezone the property to Planned Unit Development (PUD), to allow for a variety of commercial uses on the property, including a gas station, car wash, convenience grocery store, and various retail and office uses, storage, and also to allow for some design flexibility within the site. Staff requests additional information/description regarding the proposed/requested "storage" use. Staff also suggests that the applicant consider including "restaurants" as an allowable use, due to the possibility of a stand-alone or fast food restaurant locating on the site.

The purpose of a PUD district is to provide standards which allow flexibility in the development of neighborhoods that would not be possible under a conventional zoning district, and in exchange, providing improved site design. The intent of a PUD as stated in the City's Code is to:

A. Provide for the establishment of PUD (planned unit development) zoning districts in appropriate settings and situations to create or maintain a development pattern that complies with the city comprehensive plan.
B. Allow for the mixing of land uses within a development when such mixing of land uses could not otherwise be accomplished under this title.
C. Provide for variations to the strict application of the land use regulations in this title in order to improve site design and operation, while at the same time incorporating design elements (e.g., construction materials, landscaping, lighting, etc.) that exceed the city's standards to offset the effect of any variations.
D. Promote a more creative and efficient approach to land use within the city, while at the same time protecting and promoting the health, safety, comfort, aesthetics, economic viability, and general welfare of the city.
E. Preserve and enhance natural features and open spaces.
F. Maintain or improve the efficiency of public streets and utilities.
G. Ensure the establishment of appropriate transitions between differing land uses.

The City's Code requires that standards of the most closely related conventional zoning district be considered for various code requirements. The B1 Neighborhood Business District standards will be used in evaluating the development.

To demonstrate how the proposed development will meet the (above) intended goals of the PUD, the developer must identify how the development will exceed the City's minimum design standards. At this point the developer has not submitted a letter explaining how the proposed development will exceed City design requirements to offset the effect of variations to required design standards. A letter should be required as part of the Development Stage PUD application.

The following table contains a summary of the variances identified by staff and currently depicted on the plans, and being sought as part of the current PUD request. These items are further reviewed and explained throughout this report.

	ENM B-1 District	Barsness 1st Addition
Front Setback	65'	53' for building on Lot 3 (as depicted on site plan)
Rear Setback	30'	(The proposed rear setback can only be determined after the plan is amended to show the wetlands and stormwater ponds contained in outlots)
Side Setback	20'	12' (as depicted on site plan)
Wetland Setback	35'	10' for building on Lot 2 (as depicted on site plan) 30' for the building on Lot 3 (as depicted on site plan)
Wetland Buffer Width	30' average, 25' minimum	(must provide average), 0' minimum
Stormwater Pond Setback	35'	10' for building on Lot 3 (as depicted on site plan)
Building materials (11-26A-4)	Exterior wall treatments for motor fuel stations shall be brick, stone, decorative concrete block or stucco.	(Planning Commission input is needed in regards to acceptable exterior building materials / facades for all buildings on the site)
Landscaping (11-10-4)	25% of lot area be landscaped	(The applicant must determine percentage of lot area to be landscaped, located outside of the delineated wetlands and stormwater ponds)
Landscaping for Motor Fuel Stations(11-26A-4)	Along road rights-of-way, a 15' wide area shall be landscaped	(Planning Commission input is needed in regards to acceptable width of landscaped area; 5' is being proposed by the developer)
Easement Width (12-9-6)	10'	(Planning Commission input is needed in terms of easement widths; 5' proposed by developer)
Trail Construction	Trail constructed by developer	(Planning Commission input is needed in terms of requiring a trail adjacent to subject property; the developer is proposing the trail be constructed by others)
Car Wash Vehicle Stacking	Minimum of 4 spaces per wash bay	(Planning Commission input needed, 2 stacking spaces proposed)
Off Street Loading (11-9-11)	1 space required (10' x 25')	(Planning Commission input is needed; no off-street loading spaces were identified on the plan)

Lot Size

The gross area of the property is 10 acres. The minimum lot size in the B1 district is 20,000 square feet. Three lots are being proposed, as follows:

- Lot 1 - 2.31 Acres
- Lot 2 – 2.30 Acres
- Lot 3 – 3.41 Acres

All lots, as currently proposed, meet the minimum lot size requirement for the B1 zoning district. The City Code requires that stormwater ponds and wetlands be contained in outlots and dedicated to the City. The current plan does not depict the stormwater ponds and wetlands on outlots. A plan revision to address this requirements will affect the proposed lot sizes.

Lot Access
All proposed lots front on a public street as required by the City's Subdivision Ordinance. For commercial / industrial lots that front on an arterial roadway or major collector, the Subdivision Ordinance states that Lots shall be designed to minimize the number of access points onto the roads by using access from a local road, a frontage road, frontage driveways with cross easements serving multiple properties, or shared driveways. The development has been designed to meet this requirement; cross access easements will be needed to ensure perpetual access to Lot 1.

Setbacks
The required property line structure setbacks in the B1 zoning district are 65' from minor arterial roadways (both Co Rd 2 & Co Rd 91), 20' from a side property line and 30' from a rear property line. There is also a required 35' building setback to wetlands and stormwater ponds.

- Lot 1 – Proposed building does not meet the 20' side setback requirement; it is approximately 12' from the side property line.
- Lot 2 – Proposed building meets lot line setback requirements but does not meet the required 35' wetland setback; it is approximately 10' from the wetland.
- Lot 3 –Building is proposed at +/- 53' from CSAH 2 right-of-way; the requirement is 65'. The proposed building does not meet the required 35' stormwater pond setback; it is approximately 10' from the pond HWL. The building appears to be approximately 30' from the wetland boundary as opposed to the required 35'.

If the Planning Commission is supportive of the setback deviations, it can be noted through the PUD approval process.

The motor fuel station canopy must be setback 30' from the right-of-way; the exact location of the canopy has not been provided.

Height Requirements
Structures shall not exceed 35' in height in the B1 zoning district. The fuel island canopy shall be not less than 14' and not more than 18' in height. The proposed building height and canopy height have not been noted on the plans. Based on the Concept Elevations (drawing) it appears that the gas station portion of the building on Lot 1 is approximately 22' in height and the office/retail portion of the building is approximately 34' in height. The design appears to meet City Code requirements.

(Building) Design Requirements – Chapter 5 & 26
Title 11-5-1-A-4(b) identifies allowable exterior building materials for commercial zoning districts. Acceptable materials include brick, concrete composite board, stone, precast concrete panels, rock face concrete block, wood, glass curtain wall panels, stucco or EIFS, steel, aluminum or fiber cement siding.

In addition to the above requirements, Title 11-26A-4 of the city code contains architectural requirements specific to motor fuel stations, as follows:

1. As a part of the conditional use permit application, a color illustration of all building elevations shall be submitted.
2. The architectural appearance, scale, and functional plan of the building(s) and canopy shall be complementary and compatible with each other and the existing buildings in the neighborhood setting.
3. Exterior wall treatments such as brick, stone (natural or artificial), decorative concrete block and stucco shall be used.

Renderings for only the building on proposed Lot 1 have been submitted; renderings have not been submitted for buildings on proposed Lots 2 and 3. The proposed building materials for the buildings on proposed Lot 1 have not been submitted; based on the architectural renderings it appears the gas station building, car wash, and attached multi-use building may be proposed as concrete tilt up panels. The front building facades are broken up with varied roof lines and canopies.

From the limited information provided about the motor fuel station building on proposed Lot 1, staff does not feel the building meets the requirements of Title 11-26A-4 (3) above. Because the proposed building will be a "gateway" to the City's downtown and located at a high-traffic volume intersection, staff does not recommend that the Planning Commission consider a variance from the required design standards pertaining to motor fuel stations. The renderings submitted convey somewhat of an industrial looking building. Staff recommends that, at a minimum, brick and/or stone features be integrated into the building façade of the motor fuel station and adjoining building to meet the requirements of Title 11-26A-4 of the City Code. Staff also suggests that the remaining buildings (the buildings on Lots 2 & 3) be required to have increased design standards as a "trade-off" for the PUD variations. Examples could be:

- The predominant exterior building material for the buildings on proposed Lots 2 & 3 shall consist of brick or stone.
- At least 40% of the front facing façade shall consist of windows.
- The building facades visible from public rights of shall incorporate detail using colors, textures, and varying material treatments to break up the front façade and provide a high degree of aesthetic treatment.

Staff is requesting Planning Commission input regarding the building design / façade / materials for the motor fuel station building and other buildings on the site.

Canopy & Pump Island Design

Below are design requirements for pump-islands and canopies in the B1 zoning district:

1. The edge of the canopy shall be thirty feet (30') or more from the front and/or side lot line; provided, that adequate visibility both on site and off site is maintained.
2. The canopy shall not exceed eighteen feet (18') in height and shall provide fourteen feet (14') of clearance to accommodate a semitrailer truck passing underneath.
3. The canopy fascia shall not exceed three feet (3') in vertical height.
4. The architectural design, colors, and character of the canopy shall be consistent with the principal building on the site.
5. Signage may be allowed on a detached canopy in lieu of wall signage on the principal structure; provided, that the individual canopy sign does not exceed more than twenty percent (20%) of the canopy facade facing a public right of way.
6. Canopy posts/signposts shall not obstruct traffic or the safe operation of the gas pumps.
7. Pump islands shall comply with the following performance standards:
    a. Pump islands shall be elevated six inches (6") above the traveled surface of the site.

b. All pump islands shall be set at least thirty feet (30') back from any property line. Additionally, the setback between the pump islands' curb face shall be at least twenty four feet (24').

Details regarding the proposed pump island canopy have not been provided, other than those shown in the renderings. A review of ten recently constructed gas stations shows that canopies ranged from 26' to 54' in width, but those canopies cover at least two pumps.

It is noted that signage on the canopy is only permitted under the City code in lieu of signage on the building. The developer should submit details regarding the proposed pump island canopy, that meet the requirements of Section 11-26A-4 of the City Code (above).

The current plan shows setback between pump islands at 20' rather than the 24' required by City Code Staff recommends that 24' between islands be considered as a minimum, as many pump islands today are actually designed with 30' between pump islands.

Staff notes that the building renderings shown on the "Concept Elevations" drawing dated 11-29-17 seem to depict space for two vehicles at each fuel pump. The developer has verbally indicated that there would be room for only one pump and vehicle (not double stacked). The site, as currently designed, does NOT accommodate space for two vehicles. The rendering should be revised to accurately depict the single fueling stations.

Commercial Car Wash

Commercial car washes are allowed as a conditional use in the B1 zoning district. Car washes have specific performance standards listed in the City Code. Staff would like to specifically call out the following performance standards:

- The architectural appearance and functional plan of the building and site shall not be so dissimilar to the existing buildings or areas as to cause impairment of property values or constitute a blighting influence.
- Magazine or stacking space is constructed to accommodate that can be washed during a 30-minute period and shall be subject to the approval of the City Engineer. *(This would require approximately 6 stacking spaces, and conflicts with another section of the City Code which requires 4 spaces.)*
- Parking or car magazine storage space shall be screened from view of abutting residential districts.
- Vehicular access points shall be limited, shall create a minimum of conflict with through traffic movement and shall be subject to the approval of the City Engineer.

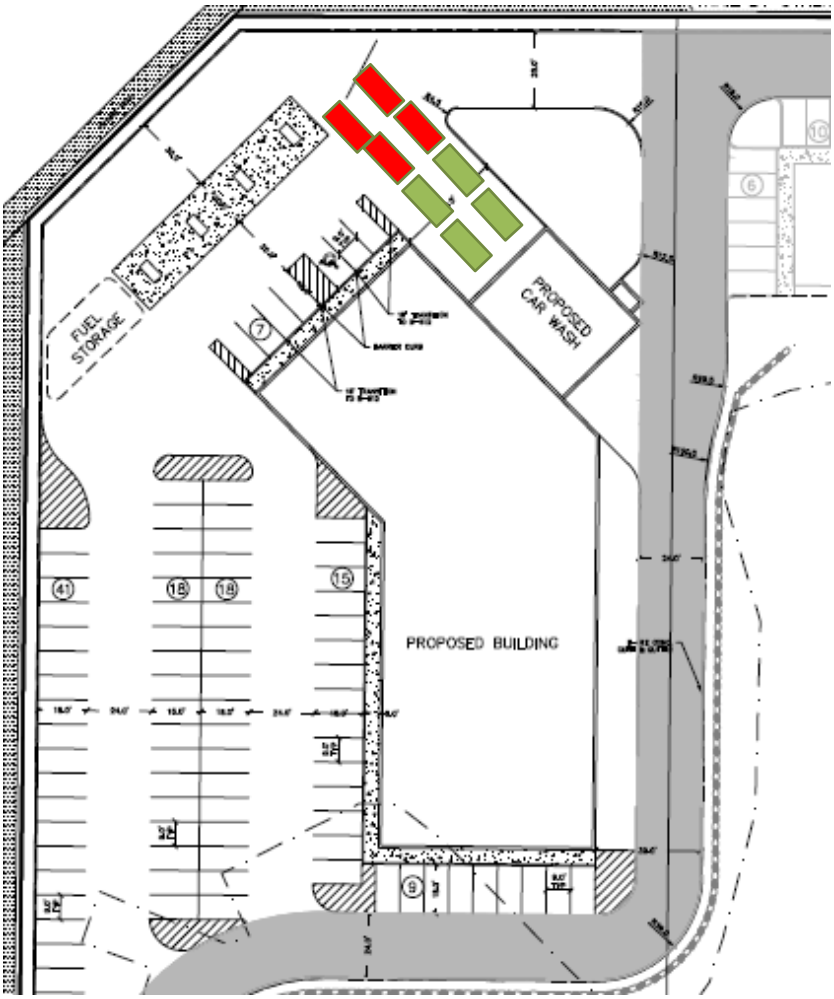

The landscaping plans depict that vehicles would enter on the northwest side of the building. The adjacent diagram depicts how vehicles would stack with the depicted entry point. Staff believes that the vehicle stacking areas would cause conflicts with traffic flow through the site, particularly in the area of the gas station. Staff's opinion is that all vehicles shown in red on the adjacent drawing would create conflicts with site circulation. Therefore, only two vehicle stacking spaces are being provided that do not interfere with site circulation.

The developer should amend the site design so that the required stacking spaces are provided and clearly identified, and do not create any conflicts with the traffic circulation on the site. Car wash stacking spaces are often designed to stack behind / in back of the buildings.

Drive-Thru

No drive-thru facilities are shown on the current site plan. Should a drive-thru be incorporated into future site plans, not less than 120' of stacking space shall be provided for single service lanes. Drive-thru windows are also to be screened from view of public rights-of-way and residential districts. Drive-thru regulations associated with car washes have separate regulations.

Gas Station Circulation

The developer has verbally indicated that there will be only one fueling station at each pump island. With the one proposed fueling station, the plan meets the minimum requirements for circulations. There is a 24' drive aisle between the parking spaces in front of the building and the fuel pumps. A review of ten other gas stations depict 24' to 30' of separation between cars parked at the pumps and parking in front of the buildings

Staff notes that it would be virtually impossible to place two pumps and have the site function without significant conflicts. It is noted that only 20' has been allowed for parking at the fuel pumps. This adjacent diagram depicts the area where vehicles would be parked if at the pump islands (shown in blue) or parked in front of the building. .

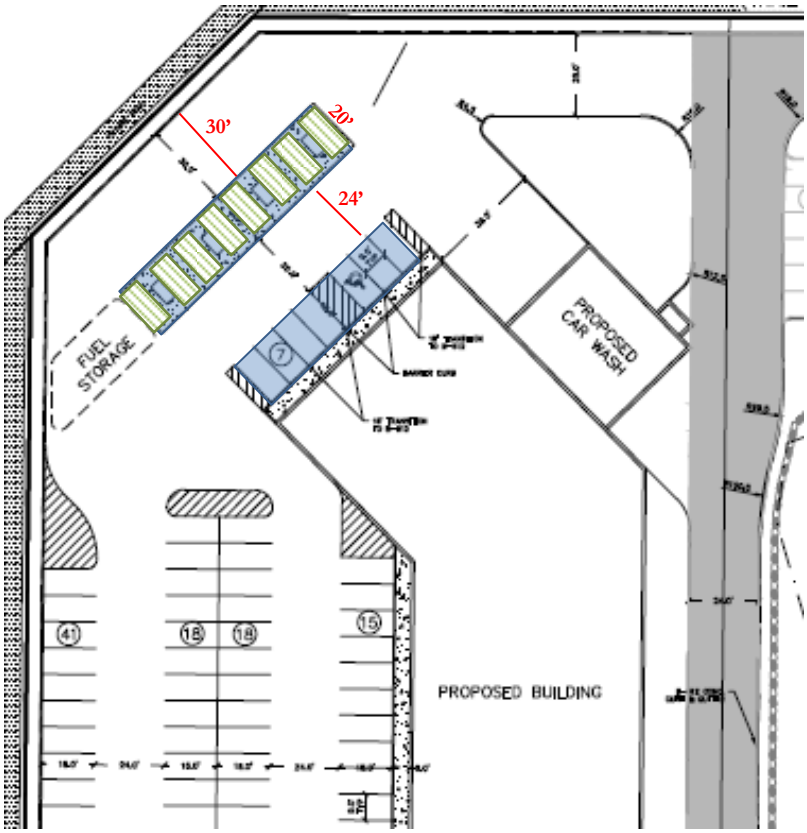

Off Street Parking – Chapter 9

Parking requirements can be found in Title 11-9 of the city code. Parking areas must have a concrete curb barrier and be setback 5' from the property line (and entirely outside of easement areas). Parking stalls must be striped with white or yellow paint not less than 4' wide. Parking areas shall be surfaced with concrete, bituminous or pavers. Parking stalls shall be a minimum of 9' x 18' and drive aisles shall be a minimum of 24' in width. Based on the engineering plans submitted, the dimensions of the parking lot drive aisles and parking stalls comply with city code, other than the drive aisles around the gas pumps as described in the above section.

The number of parking spaces required is based on the proposed use of the buildings. Section 11-9-3 (I) of the City Code states that, for the purpose of calculating the number of required off street parking spaces, the net usable floor area may be used. Detailed building layouts have not been provided at this point so net usable floor areas could not be determined. Below is a parking analysis based on gross building square footages for uses shown on the concept plan or uses that may be likely to locate on the site.

Proposed Lot 1 - The Concept Floor Plan submitted shows gross floor areas as follows:

Proposed Use	Sq Ft	Parking Requirement	Total Parking Required
Convenience Grocery / Motor Fuel	7,956	1 per 100 sq ft	80
Retail Sales & Multiple Occupancy Retail Service	19,248	1 per 250 sq ft	77
Car Wash (Accessory to Motor Fuel)	1,920	4 stacking spaces per car wash	8 (stacking spaces)
Total Required			157 + 8 stacking
Total Proposed			108 + 16 spaces at pump = 124

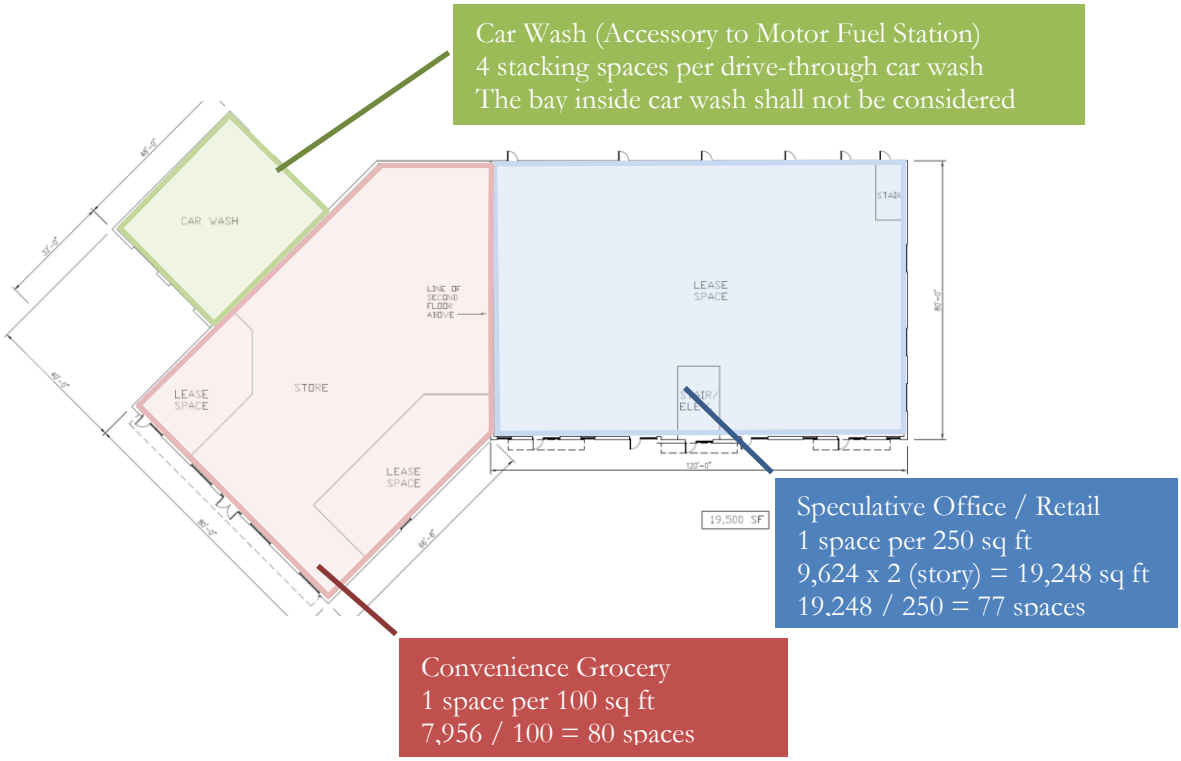

Proposed Lot 2 – The concept building on proposed Lot 2 appears to be approximately 4,800 gross square feet. No detail has been provided about this building or proposed uses. Calculating the space as "speculative office / retail" at 1 space per 250 square feet of floor area, 19 spaces would be required; 23 spaces are provided.

Proposed Lot 3 - The concept building on proposed Lot 2 appears to be approximately 4,136 gross square feet. No detail has been provided about this building or proposed uses. Calculating the space as "speculative office / retail" at 1 space per 250 square feet of floor area, 17 spaces would be required; 16 spaces are provided.

Overall Development Parking

Based on gross building square footages it appears that the site is short approximately 30 parking spaces. The developer has submitted general information indicating that 80% of the building square footage will be considered usable space and therefore the parking requirements should be based on 80% net usable space. In the absence of detailed building layouts which identify the net usable area of the building, staff would support using a percentage for calculating net usable area. Based on the calculations below, the developer is providing 84% of the required parking for the site. Staff supports the number and configuration of parking spaces as proposed. Proposed uses have been estimated at this time.

	Parking Required	**Parking Provided**	
Lot 1	157 spaces + 8 car wash stacking spaces	108 + 16 at pumps = 124 spaces + 4 car wash stacking	33 spaces short 4 car wash stacking spaces short
Lot 2	19 spaces	23	4 spaces over
Lot 3	17 spaces	16	1 space short
TOTAL	193 + 8 car wash stacking spaces	163	30 spaces short 4 car wash stacking spaces short

The car wash vehicle stacking spaces will conflict with circulation in the gas station area. The conflict could be remedied by redesigning the site.

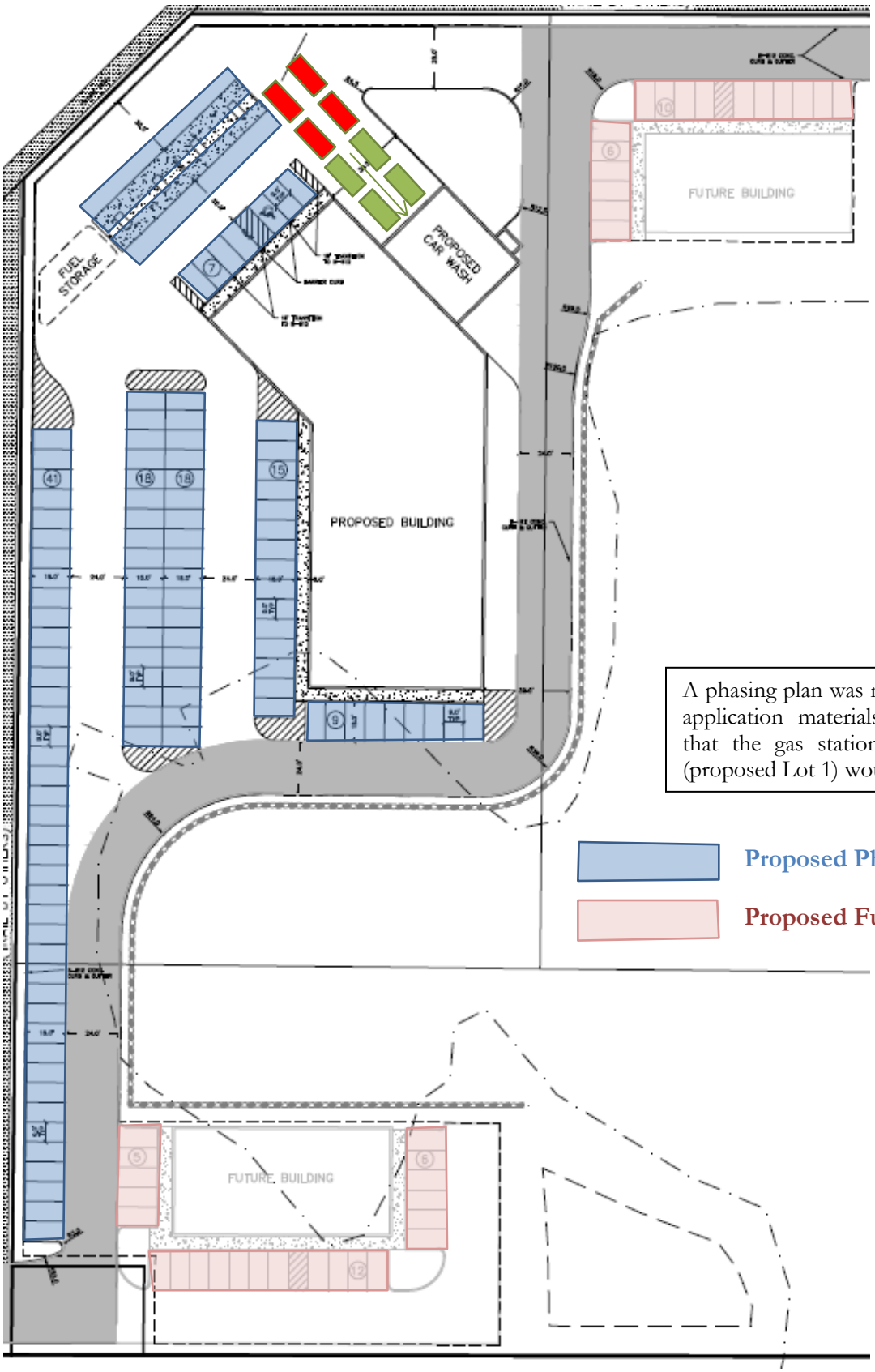

A phasing plan was not submitted with the application materials. Staff understands that the gas station portion of the site (proposed Lot 1) would be developed first.

Proposed Phase I Parking = 124

Proposed Future Phase Parking

Off Street Loading – Chapter 9
Section 11-9-11 of the City Code requires that every retail, industrial or manufacturing, or wholesale use having a gross floor area of six thousand square feet or more shall provide off street loading facilities. Off street loading spaces shall be at least 10' x 25', excluding area for maneuvering vehicles.

It is likely that deliveries to the convenience grocery / gas station will be required on a regular basis. The applicant should identify an off-street loading space as required by City Code.

Truck Circulation within the Site
Staff requests that the developer provide truck turning movement templates / diagrams to ensure that there is adequate space within the site for large trucks and fuel suppliers to maneuver. Staff recommends modeling a WB-62, and that the location of the fuel island canopy be considered during the analysis.

Garbage Dumpster – Chapter 4
Section 11-4-3 of the City Code requires that all dumpsters, garbage containers, or refuse bins that are stored outside shall be screened from view. Acceptable methods of screening include enclosures made of wood fencing material, brick, or a combination thereof. Gates and doors which allow access to the refuse containers shall have a latching mechanism which keeps it closed/locked when not in use. The plan does not depict any areas for garbage dumpsters; future submittals should incorporate a location for a dumpster which meets the requirements of Section 11-4-3 of the City Code.

Landscaping – Chapter 10
A landscaping plan and planting schedule has been submitted (shown below). The landscaping plan must meet the requirements of Title 11-10 (general landscaping requirements) and Title 11-26A-4 (landscaping requirements for motor fuel stations). Landscaping is not permitted within public rights-of-ways, and is highly discouraged within public drainage and utility easement as these areas are to be reserved for utilities.

Title 11-10-4 of the city code contains the following regulations specific to the B1 zoning district:

1. At least twenty five percent (25%) of the land area shall be sodded and landscaped with approved ground cover, shrubbery and trees. *(wetland areas and storm ponds not included in calculation)*
2. A minimum landscaped buffer area thirty feet (30') in width shall separate any parking, driveway, or structure from a lot line common with any residential district.
3. All properties abutting residential districts shall provide in-ground irrigation systems to all landscaped areas.
4. All areas disturbed by grading which are not built upon, paved or retained as a natural area shall be sodded and/or landscaped unless specifically approved as part of the overall landscape plan.
5. All new plants shall be guaranteed for twelve (12) months from the time planting has been completed. All plants shall be alive, of good quality, and disease-free at the end of the warranty period or be replaced. Any replacements shall be warranted for twelve (12) months from the time of planting.

In addition to the above requirements, Title 11-26A-4 of the city code contains landscaping requirements specific to motor fuel stations in the B1 zoning district, as follows:

1. Minimum required green area shall be in accordance with the provisions of chapter 10 of this title (above).
2. At the boundaries of the lot, the following landscape area shall be required:
    a. From side and rear property lines, an area of not less than ten feet (10') wide shall be landscaped in compliance with chapter 10 of this title.

b. From all road rights of way, an area of not less than fifteen feet (15') wide shall be landscaped in compliance with chapter 10 of this title.
c. Where lots abut residentially zoned property, a buffer yard of not less than twenty feet (20') wide shall be landscaped and screened in accordance with section 11-5-4 and chapter 10 of this title.
d. The property owner shall be responsible for maintenance of all landscaping, including within the boulevard.

Proposed plantings / species shown on Landscape Plan submitted by developer

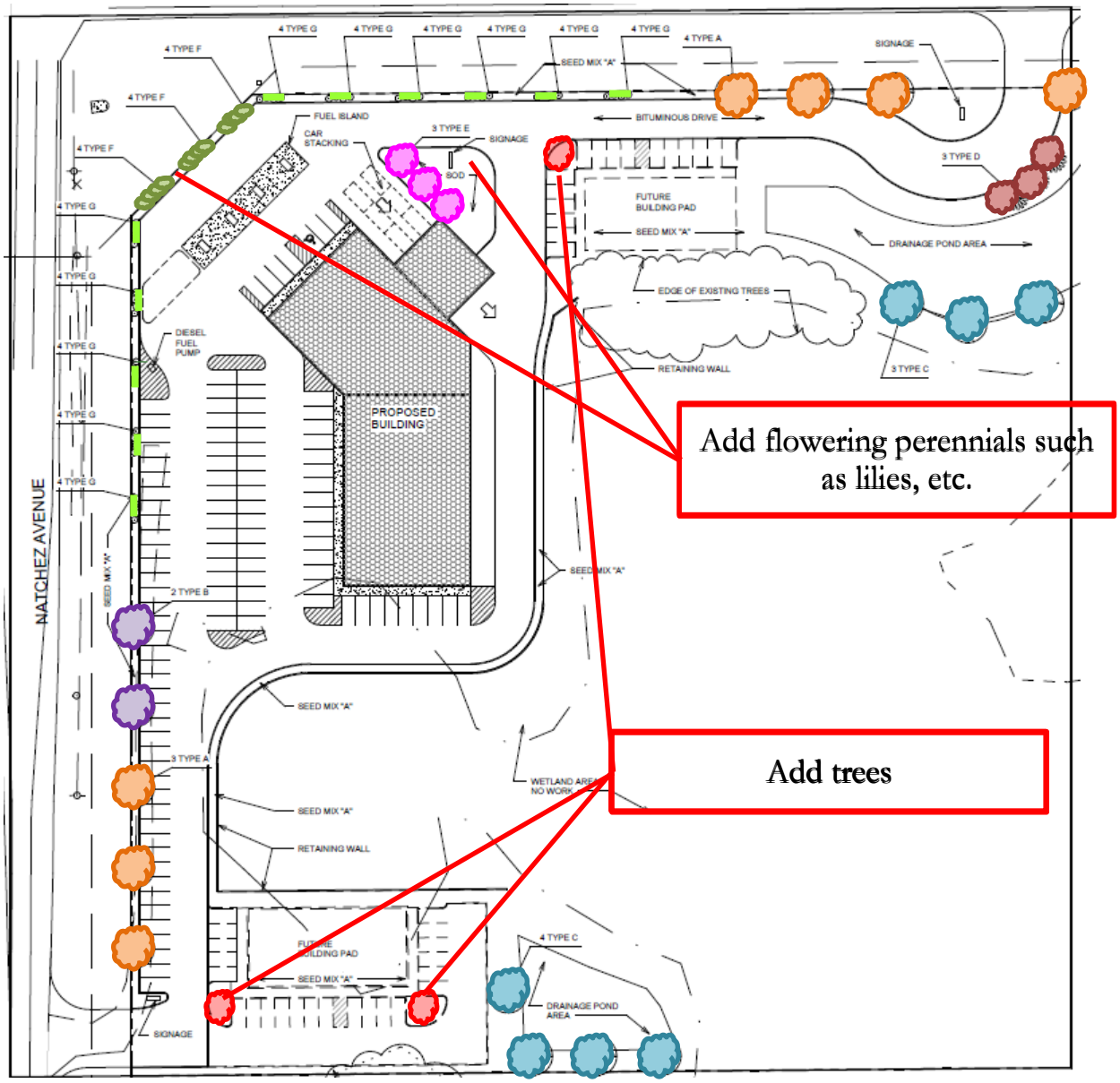

The landscaping plan does not appear to meet the requirements of Title 11-10-4, which requires 25% of the lot be landscaped. The applicant is applying for a deviation from this requirement. The applicant must calculate the amount of proposed green space located outside of the wetland area to determine the percentage of proposed green space / landscaped area within the site.

The landscape plan does not meet the requirement of Title 11-26A-4 which requires not less than a 15' wide landscaped area adjacent to the road right-of-way. The applicant is proposing only 5' between the proposed exterior curbing and the property line abutting the right-of-way; motor fuel stations specifically require an area of not less than 15' wide.

Staff does not support the deviation from 15' to 5' for two reasons: 1) the Subdivision Ordinance requires a 10' drainage and utility easement along perimeter lot lines and landscaping should not be permitted in the easement area, as the areas are intended to be reserved for utilities, and 2) 5' is a rather narrow area to maintain the number of plantings proposed; trees will be encroaching into the County right-of-way.

General comments regarding the landscaping plan include:

- Some flowering perenials, such as lilies, could be incorporated into the site plan.
- Parking lot islands could be included within the parking lot area, and deciduous trees and perennials could be planted in the parking lot islands to improve site appearance.
- The eight willow trees proposed around the stormwater pond will create maintenance issues for City staff and should be removed from the plan.

Should the Planning Commission support the site plan as submitted, the above drawing shows additional areas for plantings suggested by City staff. Staff also suggests from flowers perennials be added to the landscape plan. If the Planning Commission recommends that the site be redesigned, the landscaping plan should be revised to reflect the new design.

Lighting – Chapter 4 & 26

Title 11-4-7 of the City Code addresses lighting requirements. Exterior lighting shall not exceed .5 foot-candles at the property line when adjoining residential properties, and 1 foot-candle at the property line when adjoining a similar zone and land use.

In addition to the above requirements, Title 11-26A-4 of the city code contains lighting requirements specific to motor fuel stations in the B1 zoning district, as follows:

Exterior Lighting: The lighting shall be accomplished in such a way as to have no direct source of light visible from adjacent land in residential use or from the public right of way and shall be in compliance with section 11-4-7 of this title. A comprehensive lighting plan shall be submitted as part of the conditional use permit application, and shall be subject to the following performance standards:

1. Canopy Lighting: Canopy lighting under the canopy structure shall consist of canister spotlights recessed into the canopy. No portion of the light source or fixture may extend below the ceiling of the canopy. Total canopy illumination below the canopy shall not exceed one hundred fifteen (115) foot-candles at ground level.
2. Illumination: Maximum site illumination shall not exceed limits set forth in section 11-4-7 of this title. (above).

The proposed lighting plan dated 12/11/17 exceeds the allowable foot-candles at the right-of-way line. The lighting plan must be updated to comply with City lighting requirements.

Signage – Chapter 12

The landscaping plan depicts the location of three signs, one at each entrance and one near the car wash. Because details regarding any proposed signage have not been submitted, staff is not able to determine if any proposed signs meet City code requirements. If a sign plan is not submitted during the PUD process, the property will simply be subject to the sign regulations in Title 11-12 of the City Code, and for the B1 zoning district. Consistent with the objections of the "Town Center" land use designation (which the property is designated as), signage that would be compatible with a historic downtown is encouraged. The Planning Commission may want to consider requiring sign details regarding the PUD approval process.

Easements

The City's Subdivision Ordinance (Chapter 9-6 (A)) requires that drainage and utility easements shall be provided on all lot lines. At a minimum, these easements shall be 10' wide along all lot lines that abut streets and along all boundaries with land not being developed, and a total of 10' wide on interior property lines.

The preliminary plat drawing submitted depicts only 5' easements along lots lines that abut the street and adjacent properties, and no easements along interior lot lines.

Staff recommends that 10' wide drainage and utility easements shall be shown in the areas depicted in blue on the drawing. It is noted that the perimeter curb line, as shown on the current concept plan, is located only 5' from the property line. The curbing should be moved outside of the drainage and utility easement.

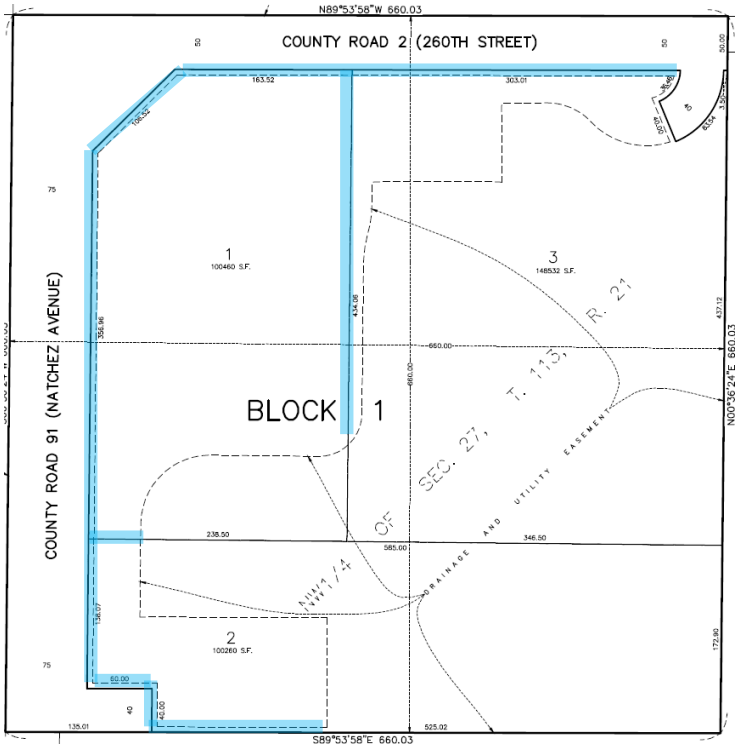

Access / Roads / Transportation Issues

The proposed development borders two existing roads, both of which are Scott County jurisdictional roadways. Roads, functional classification of the roads, and comments are as follows:

County Road 2 / Main Street, A Minor Arterial Roadway. – The purpose of an A Minor Arterial Roadway is to link urban areas to principal arterials (such as I35) and larger towns. The emphasis of these roadways is mobility as opposed to access. Official traffic volumes on this section of Co Rd 2 are 9,200 vehicles per day (2014) and a draft count indicates 10,400 vehicles per day; volumes are expected to grow to nearly 22,000 vehicles per day upon full build-out of the area identified in the City's Comprehensive Plan. The speed limit is 55 mph. The roadway is under the jurisdiction of Scott County. Comments received from Scott County in a memo dated August 8, 2016 pertaining to Co Rd 2 are as follows:

- The County will permit a right-in/right-out on Co Rd 2. The access on Co Rd 2 requires a right turn lane. (Right turn lane is not shown on current plan submittal.)
- The concept shows a ¾ access on Co Rd 2. The ¾ access would not be permitted. The left turn movement from Co Rd 2 shall be conducted at the Co Rd 2 and Co Rd 91 intersection. (This has been corrected on current plan set.)
- Any access shall be required to be a public street. The public street does not appear to be identified on these plans. (The current plan attempts to address this issue; further City Engineer review of this matter will be required.)
- The minimum right-of-way for minor arterial roadways is 75' from centerline. Additional right-of-way along Co Rd 2 may be needed to provide for the required turn lane and taper. Detailed cross sections in this area showing the turn lane, trail, boulevard, etc. are required. (Additional right-of-way shown as requested by Scott County, but turn lane and associated cross sections have not been provided.)
- Any work within the County right-of-way requires a County permit.

The current concept plan proposes an eastbound right-in, right-out access on Co Rd 2. Scott County has indicated that they will allow the right-in, right-out access on Co Rd 2, but will require an eastbound right turn lane into the site which has not been shown on the current plan set.

Since the time of original comments by Scott County, grant funding for a roundabout at the adjacent intersection has been approved. Staff sees two possible options for design and construction of the turn lanes into the site:

a) The developer could design and construct the east-bound right turn lane into the site, as required by Scott County.
b) The east-bound right turn lane into the site could be designed and constructed in conjunction with the proposed roundabout project, with all costs associated with the turn lanes being placed in escrow with the City by the developer. The turn lane will only benefit the subject property and therefore the developer/property owner should bear all costs associated with the proposed turn lane. (This method would need to be approved by Scott County and would require timing coordination.)

It should be noted that the roundabout project is currently scheduled for 2020 construction. Constructing the turn lane with the roundabout project may present some timing issues for the developer.

County Road 91 / Natchez Avenue, B Minor Arterial Roadway. The purpose of a minor arterial roadway is to link urban areas to principal arterials (such as I35) and larger towns. The emphasis of these roadways is mobility as opposed to access. Traffic volumes on this section of Co Rd 91 are approximately 4,050 vehicles per day; and are expected to grow to nearly 11,000 vehicles per day upon full build-out of the area identified in the City's Comprehensive Plan. The speed limit is 55 mph. The roadway is under the jurisdiction of Scott County. Comments received from Scott County in a memo dated August 8, 2016 pertaining to Co Rd 91 are as follows:

- The access on Co Rd 91 would require both a right turn lane and left turn lane. (Right and left turn lanes have not been shown on the current plan submittal.)
- Access shall be required to be a public street. The public street does not appear to be identified on these plans. (The current plan attempts to address this issue; further City Engineer review of this matter will be required.)
- The minimum right-of-way for a minor arterial roadway is 75' from centerline. Detailed cross sections showing the turn lane, trail, boulevard, etc. are required. (Additional right-of-way has been shown as requested by Scott County; cross sections and other required improvements have not been provided for.)

The current concept plan proposes a full movement intersection on Co Rd 91 at the south end of the property. Scott County had previously indicated that they would allow the full movement intersection at this location, although they did not guarantee that the full movement intersection would be permitted perpetually, and nothing that they will require both right and left turn lanes into the site which have not been shown on the current plan set.

Since the time of original comments by Scott County, grant funding for a roundabout at the adjacent intersection has been approved. Staff sees two possible options for design and construction of the turn lanes into the site:

a) The developer could design and construct the north-bound right turn lane, and the south-bound left turn lane into the site, as required by Scott County.
b) The north-bound right turn lane and the south-bound left turn lane into the site could be designed and constructed in conjunction with the proposed roundabout project, with all costs associated with the turn lanes being placed in escrow with the City by the developer. (This method would need to be approved by Scott County and would require timing coordination.)

It should be noted that the roundabout project is currently scheduled for 2020 construction. Constructing the turn lane with the roundabout project may present some timing issues for the developer.

Planned Roundabout @ Co Rd 2 & Co Rd 91. Since planning began on development of the subject property, the City and County have secured grant funding for a roundabout at this intersection. The project is currently in the preliminary design phase and is currently proposed to be constructed in 2020. Draft layouts for the roundabout are attached to this report, but have not been approved by either Scott County or the Elko New Market City Council. The draft layouts are conceptual at this point.

City Street Connections to County Road. Scott County does not allow private commercial access connections to the county roadway system. Connections for commercial uses must be made via a public street. The developer has attempted to address this requirement be dedicating a 40' wide area that would be considered city street right-of-way. The City Engineer presented options to address the access requirements in a memorandum dated October 24, 2016 (attached). Revised City Engineer Comments are contained in a memo dated March 6, 2018. The City Engineer recommends the public street access be redesigned.

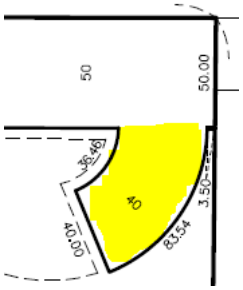

Trails

The City's 2030 Park & Trail Plan identifies a proposed sidewalk / trail corridor along the south side of Co Rd 2 and the east side of Co Rd 91. The City's Transportation Plan also recommends that sidewalks or trails be constructed adjacent to all minor collectors, major collectors, and minor arterial roadways. The current concept plans show a proposed 8' trail along both Co Rds 2 and 91. The plans depict "Trail by Others". Consistent with the City's adopted plans, city staff recommends that a 10' trail be constructed along the south side of Co Rd 2 and the east side of Co Rd 91, adjacent to the subject property, concurrent with the development and by the developer. A 10' trail is consistent with the existing trail segment located to the south, near Aaron Drive, and is also the MnDOT standard width for shared use paths (pedestrians and bicycles). The trail can be constructed within the county road right of way but requires a permit from Scott County. Staff recommends that all plans be amended to depict that a 10' trail be constructed by the developer. If the trail is constructed concurrent with the future roundabout project, staff suggests a financial contribution by the developer towards the trail.

Internal Pedestrian Routes

Staff recommends that the plans depict pedestrian access routes from the perimeter trails/sidewalks into the convenience store building. The identified routes should show the safest possible routes for pedestrians or bicyclists to access the buildings on the site. The route could be identified by either pavement markings or varying surface materials.

Wetlands / Floodplain / DNR Protected Waters

There are known wetlands on the subject property. A wetland delineation report prepared Whitt Environmental Services has been submitted for review. The report indicates a large wetland on the subject property. The delineated boundary corresponds approximately with the 1130 contour line. There is also a DNR Protected Water on the property with an ordinary high water mark of 1126.4. The wetland delineator has opined that the City of Elko New Market, Minnesota Board of Water and Soil Resources, Minnesota Department of Natural Resources, and the U.S. Army Corp of Engineers all have jurisdiction over the wetlands on or adjacent to the site.

The developer is proposing to fill / mitigate a portion of the wetland. A wetland application was submitted at one time but subsequently withdrawn. During the past year a fair amount of review has been conducted related to the boundary of the wetland and the proposed mitigation limits. Several meetings of Technical Evaluation Panel (TEP) have taken place, and in August of 2017 there seemed to be consensus by the TEP regarding the proposed fill / mitigation area.

At this time the developer has chosen to proceed with application for sketch plan review, with the understanding that any potential approvals would be 100% contingent upon concurrence with the wetland boundary and approval of the application for mitigation / replacement plan. All recommendations for approvals should be subject to the approval of all wetland applications, including wetland boundary concurrence and approval of the wetland replacement plan.

There are no FEMA designated floodplain areas on the subject property.

City Code requires that wetlands (and stormwater ponds) be conveyed to the City in the form of an outlot. The plan should be revised to show the stormwater ponds and wetland areas in outlots to be conveyed to the City rather than easements, as currently shown.

Wetland Buffer Requirements

Title 11-11-4 (C) of the city code requires vegetative buffers be maintained adjacent to delineated wetlands. The buffer width is dependent upon the functional assessment (quality) of the wetland. A MnRAM report prepared by Whitt Environmental Services has been submitted. The results of the report indicate that the wetland must have a wetland buffer with an average width of 30' and a minimum width of 25'.

The city code also states the following:

"The first 25' of buffer, as measured from the wetland, cannot be disturbed during project construction (i.e. cleared or graded, except for temporary disturbances for public roads and utility construction) and shall be protected from disturbance with temporary fencing prior to construction. Vegetation can be replaced and site soils preparation work completed within the first 25' if necessary to establish acceptable buffer vegetation in accordance with these wetland regulations."

The current plan does show grading within the buffer area. Approval of the plan as submitted would be approving a reduced wetland buffer from the required 30' (average) and 25' minimum to 0'. (average buffer unknown.)

Stormwater

The current plans shows that the developer is proposing the expand an existing stormwater pond owned by Scott County, and direct drainage from the majority of the site into this pond, which is located on the northeasterly area of the site. A future phase (proposed Lot 2) also proposes construction of a small pond on the southerly portion of the property.

Preliminary stormwater information was submitted to Scott County in May, 2017 to determine if they were agreeable to the developer connecting to their existing pond. County comments returned to the developer's engineer are as follows:

- Check the rainfall data. The model used 7.83 inches for a 100 year storm, while the precipitation data server states the 100 year amount is 7.30 inches. Revise the models accordingly.
- The 0.1 foot rise in HWL is within the realm of rounding and is acceptable.
- Provide a narrative or direction on how infiltration is being done on the site or why it is not, with the reasons why.
- Otherwise, fine from a water resources perspective.
- **Note that does NOT include comments on any other County Highway Requirements, such as access or turn lanes.**

Revised stormwater calculations have been submitted to the City Engineer for review. His general comments are contained in a memo dated March 6, 2018.

The final stormwater design must be reviewed and approved by the City Engineer and Scott County.

City Code requires that stormwater ponds (and wetlands) be conveyed to the City in the form of an outlot. The plan should be revised to show the stormwater ponds and wetland areas in outlots to be conveyed to the City rather than easements, as currently shown.

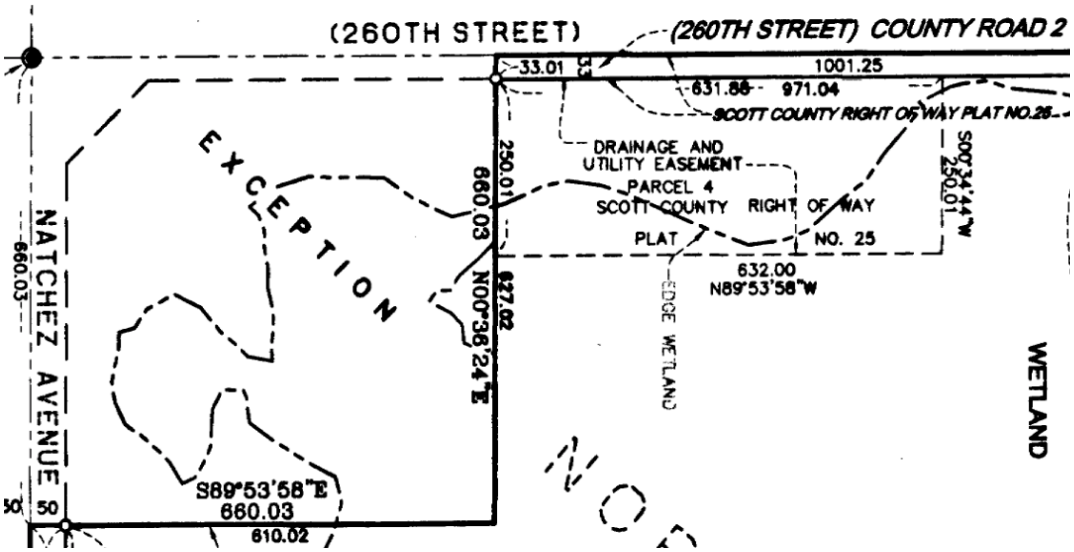

Drainage easement for existing (County) pond located east of developer's property

Aerial view of County stormwater pond located east of developer's property

View of existing County stormwater pond located east of developer's property

Sanitary Sewer

Sanitary sewer is available along both Co Rd 91 and Co Rd 2. PVC sanitary sewer lines are proposed to connect to the existing trunk sewer lines. The buildings on Lots 1 and 3 are proposed to share a sanitary connection. If this is the case, a drainage and utility easement is needed to cover a portion of the sanitary line. Preliminary City Engineer comments are contained in a memo dated March 6, 2018. The City Engineer must review and approve the proposed sanitary sewer plan.

Water

Water is available along Co Rd 2. The developer is proposing to install an 8' ductile iron water line that will service the development and extend through the property and extend to the property to the south. 6" service lines are proposed to service the building. Staff suggests that trunk water line be constructed within the road right-of-way if possible. If that is not possible, there will need to be a drainage and utility easement covering the water lines that will serve additional property to the south and Lot 3. Preliminary City Engineer comments are contained in a memo dated March 6, 2018. The City Engineer must review and approve the proposed water plan.

Parks Commission Comments

Title 12-9-8 of the city code requires that 10% of the gross area being subdivided be dedicated for public parks, trails, or open space. If no land dedication is required, the park fee is $2,800 per acre for commercial development.

The City's adopted Park & Trail Plan identifies future trails along the east side of Co Rd 91 and the south side of Co Rd 2. A sidewalk or trail shall be constructed along the south side of Co Rd 2, and along the east side of Co. Rd. 91 at the time of development, consistent with the City's adopted plan. Along Co Rd 91 to the south, there is an existing 10' wide trail, and along the south side of Co Rd 2 to the west there is a 5' wide sidewalk.

On September 1, 2016, the Parks Commission reviewed a concept development plan and made the following recommendation:

- The developer construct the trails along his property at the time of development, which is identified in the City's Park and Trail Plan on the eastside of CSAH 91 and the south side of CSAH 2; and
- The developer contribute cash in-lieu-of park land dedication.

The developer should calculate the area/acreage of the site located outside of the wetland area. The park dedication fee will be based on the acreage located outside of the wetland area.

City Engineer Comments

The city engineer submitted preliminary comments on the previous concept plan in an email dated July 11, 2016 and a revised memo dated March 8, 2018 (attached). Comments are categorized by transportation, stormwater, sanitary sewer, and water. In addition, the City Engineer has conveyed options for access into the site via public/city street connections in a memo dated October 24, 2016 (attached).

Public Works Director Comments

The Public Works Director has made the following comments:

- There is no area for City plow trucks to turn around at either access, and no room for snow storage.
- I didn't see any turn lanes shown on this plan.
- The trail is labeled to be done by others, this should be included as part of the project.
- I think there may be issues with the car wash stacking up into where the gas pumps are located.
- I would prefer to see the watermain located in the right-of-way (if possible) rather than under the parking lot, in case of a watermain break or leak.

Fire Chief Comments

The Fire Chief has not commented on the Sketch Plan. An emergency /rapid access system will be required on the proposed commercial building at the time of construction (Knox Box).

Police Chief Comments

The Police Chief has reviewed the Sketch Plan and has made the following comments:

- The site design is generally acceptable.
- It would be my preference to have the "through road" in front of the building.
- I would recommend large windows on the front of the convenience store building, for safety purposes and so the convenience attendants can sufficiently view potential gas drive-offs.

Building Official Comments

The Building Official has reviewed the Sketch Plan and made the following comment:

- I have no comments on the Concept Plan for the Barsness commercial development.

Scott County Highway Department Comments

At the time of this report, comments from Scott County had not yet been received. Several comments previously made by Scott County are referenced in the transportation section of this report, and the most recent comments from Scott County are attached and dated August 8, 2016.

DNR Comments

At the time of this report comments had not been solicited or received from the DNR.

Staff Recommendation:

Staff supports the proposed use of the property for the proposed motor fuel station, car wash, convenience store, retail, office and restaurant uses. Staff believes that, as noted throughout this report, there are design issues within the site itself that need further attention and redesign. Staff and the developer are seeking additional input from the Planning Commission and City Council regarding the site design.

Staff makes the following comments regarding the Sketch Plan that should be considered as part of the Development Stage PUD and Preliminary Plat Applications:

1) The proposed use of the property meets the intent of the guided land use for the area as stated in the City's Comprehensive Plan.

In terms of the requested deviations from City Code, staff supports the following requested deviations:

- Building setback deviation for building on Lot 3 – 53' from front row
- Building setback deviation for building on Lot 1 – 12' from side
- Rear yard setback deviations for buildings on Lots 2 & 3 (can be further determine after outlot boundary is drawn)
- Wetland buffer setback to 0' , as depicted on site plan
- Wetland setback for buildings on Lot 2 and 3
- Stormwater pond setback for building on Lot 3
- Requirement that 25% of lot be landscaped

In terms of the requested deviations from City Code, staff does not support the following requested deviations:

- Deviation for building materials on motor fuel station (gateway to City)
- 15' wide landscaped area for motor fuel station (gateway to city)
- 5' wide drainage and utility easements rather than the 10' required by City Code (precedent setting)
- Trail constructed by others (will be an immediate need for pedestrians to access the site)
- Deviation for car wash stacking spaces (negatively affects internal site circulation at gas station)
- No off street loading area (high likelihood that loading space will be needed for convenience store and other deliveries)

Staff makes the following recommendations for future consideration:

1) The sketch plan recommendation is issued based on the following plans prepared by James R. Hill and Appro Development, all on file with the City of Elko New Market Planning Department:

    - Title Sheet – 12/29/17
    - Existing Conditions Drawing - 12/29/17
    - Preliminary Plat Drawing – 12/27/17

- Preliminary Erosion & Sediment Control Plan – 12/29/17
- Preliminary Grading & Drainage Plan – 12/29/17
- Preliminary Utility Plan – 12/29/17
- Preliminary Paving & Dimensional Plan – 12/29/17
- Detail Plates – 12/29/17
- Landscaping Plan 12/22/17
- Lighting Plan – 12/11/17
- Concept Floor Plan 11/29/17
- Concept Elevations / Building Renderings 11/29/17
- Concept Building & Site image – 12/13/17

2) The developer must enter into a Planned Unit Development Developer's Contract with the City of Elko New Market, and the Agreement must be approved by the City Council prior to final plat approval of the site.
3) Subject to the City Engineer's memo dated March 6, 2018.
4) Final development, grading and construction plans must be approved by the City Engineer, Public Works Director and Community Development Specialist prior to final plat approval.
5) Additional descriptive information should be provided regarding the meaning of the requested "storage" use.
6) The B1 Neighborhood Business District standards apply to the development, except as specifically noted in the table describing allowable variations.
7) All approvals should be subject to the approval of all wetland applications, including wetland boundary concurrence and approval of the wetland replacement plan.
8) The developer shall submit a letter explaining how the project, as proposed, meets the intended goals of a PUD and how the development will exceed City design requirements to offset the effect of (PUD) variations to required design standards.
9) Cross access easements will be needed to ensure perpetual access to Lot 1.
10) The proposed motor fuel station canopy must be setback 30' from the right-of-way lines and shall meet the design requirements of Section 11-26A-4 of the City Code. Additional details regarding the proposed fuel station canopy should be provided with the PUD application.
11) Brick and/or stone features shall be integrated into the front building façade of the motor fuel station building to meet the requirements of Title 11-26A-4 of the City Code.
12) Buildings will be required to have increased design standards as a "trade-off" for the PUD variations. The building facades visible from public rights-of-way shall incorporate detail using colors, textures, and varying material treatments to break up the facades and provide a high degree of aesthetic treatments. The predominant exterior building material for the buildings on proposed Lots 2 & 3 shall consist of brick or stone. At least 40% of the front facing façade shall consist of windows.
13) The site plan shall be revised to show 24' between the pump islands, as required by Title 11-26A-4 of the City Code.
14) The building renderings shown on the "Concept Elevation" drawing dated 11/29/17 should be revised to clearly reflect single fueling stations, or the rendering should be removed from the plans.
15) The plans shall be revised so that the required stacking spaces are provided and clearly identified, and do not create any conflicts with the traffic circulation on the site.
16) The plans shall be revised to depict the required off-street loading space as required by Title 11-9-11 of the City Code.
17) The developer shall submit WB-62 and other truck turning movement templates / diagrams to ensure that there is adequate space within the site for large trucks and fuel suppliers to maneuver.
18) Future submittals should incorporate the location for a garbage dumpster which meets the requirements of Section 11-4-3 of the City Code.

19) The developer must provide calculations for the amount of proposed green space located outside of the wetland area to determine the percentage of proposed green space / landscaped area within the site.
20) The landscape plan shall be amended to remove the proposed willow trees located near the stormwater ponds, add trees in parking lot bump-out areas, add flowering perennials throughout the site, and provide for 15' of landscaping near the motor fuel station.
21) The lighting plan shall be amended to meet the requirements of Title 11-4-7 of the City Code; the plan submitted exceeds the allowable 1 foot-candle reading at the property line.
22) 10' wide drainage and utility easements shall be shown on all perimeter lot lines, centered on all interior lot lots, as required by Title 12-9-6 (A) of the City Code.
23) The proposed public street access into the property shall be redesigned to address the comments of the City Engineer and Public Works Director.
24) The plan shall be amended to depict the perimeter parking lot curbing located a minimum of 15' from the County Road rights-of-way in the area of the motor fuel station, and a minimum of 10' in other areas.
25) The developer will be required to provide for turn-lanes into the site. Turn lanes include an east-bound right turn lane on Co Rd 2, and both a north-bound right turn lane and a south-bound left turn lane from Co Rd 91. Two possible options for design and construction of the turn lanes into the site include:
    a. The developer may design and construct the turn lanes into the site, as required by Scott County.
    b. The east-bound right turn lane into the site could be designed and constructed in conjunction with the proposed roundabout project, with all costs associated with the turn lanes being placed in escrow with the City by the developer. The turn lane will only benefit the subject property and therefore the developer/property owner should bear all costs associated with the proposed turn lane. (This method would need to be approved by Scott County and would require timing coordination.)
26) The plans shall be amended to depict a 10' trail be constructed by the developer, or if constructed with the roundabout project, a financial contribution from the developer shall be required.
27) The plans shall be amended to clearly depict a pedestrian route from the perimeter trail/sidewalk system into the proposed motor fuel station building.
28) Stormwater calculations must be approved by the City Engineer and Scott County.
29) The plans shall be amended to show the existing wetland areas and proposed stormwater ponds in Outlots, to be dedicated to the City, rather than in easements as currently depicted.
30) The developer shall contribute cash in-lieu-of park land dedication, as recommended by the Parks Commission.
31) An emergency /rapid access system will be required on the proposed commercial buildings at the time of construction.

Attachments:
Street views of property
Ordinance requirements for commercial car washes
Ordinance requirements for motor fuel stations
Aerial Overlay
Plans prepared by James R. Hill and Appro Development
City Engineer Review Memo dated March 6, 2018
City Engineer memo regarding access dated October 26, 2016
City Staff Review Memo dated August 12, 2016
Conceptual Roundabout Plans, January 2018
Scott County comments dated August 8, 2016 (waiting for revised comments)

View from northwest corner of property, looking southeast

View from southwest corner of property, looking northeast

View from northeast corner of property, looking southwest

Commercial car washes (drive-through and self-service); provided, that:

A. The architectural appearance and functional plan of the building and site shall not be so dissimilar to the existing buildings or areas as to cause impairment in property values or constitute a blighting influence.

B. Magazining or stacking space is constructed to accommodate that number of vehicles which can be washed during a maximum thirty (30) minute period and shall be subject to the approval of the city engineer.

C. At the boundaries of a residential district, a strip of not less than five feet (5') shall be landscaped and screened in compliance with section 11-5-4 andchapter 10 of this title.

D. Parking or car magazine storage space shall be screened from view of abutting residential districts in compliance with section 11-5-4 of this title.

E. The entire area, other than occupied by the building or plantings, shall be surfaced with material which will control dust and drainage, which is subject to the approval of the city engineer.

F. The entire area shall have a drainage system which is subject to the approval of the city.

G. All lighting shall be hooded and so directed that the light source is not visible from the public right of way or from an abutting residence and shall be in compliance with section 11-4-7 of this title.

H. Vehicular access points shall be limited, shall create a minimum of conflict with through traffic movement and shall be subject to the approval of the city engineer.

I. Provisions are made to control and reduce noise.

Motor fuel stations; provided, that:

A. Motor Fuel Facilities: Motor fuel facilities shall be installed in accordance with state and city standards. Additionally, adequate space shall be provided to access fuel pumps and allow maneuverability around the pumps. Underground fuel storage tanks are to be positioned to allow adequate access by motor fuel transports and unloading operations which do not conflict with circulation, access and other activities on the site. Fuel pumps shall be installed on pump islands.

B. Architectural Standards:

1. As a part of the conditional use permit application, a color illustration of all building elevations shall be submitted.

2. The architectural appearance, scale, and functional plan of the building(s) and canopy shall be complementary and compatible with each other and the existing buildings in the neighborhood setting.

3. Exterior wall treatments such as brick, stone (natural or artificial), decorative concrete block and stucco shall be used.

C. Canopy: A protective canopy structure may be located over the pump island(s) as an accessory structure. The canopy shall meet the following performance standards:

1. The edge of the canopy shall be thirty feet (30') or more from the front and/or side lot line; provided, that adequate visibility both on site and off site is maintained.

2. The canopy shall not exceed eighteen feet (18') in height and shall provide fourteen feet (14') of clearance to accommodate a semitrailer truck passing underneath.

3. The canopy fascia shall not exceed three feet (3') in vertical height.

4. The architectural design, colors, and character of the canopy shall be consistent with the principal building on the site.

5. Signage may be allowed on a detached canopy in lieu of wall signage on the principal structure; provided, that the individual canopy sign does not exceed more than twenty percent (20%) of the canopy facade facing a public right of way.

6. Canopy posts/signposts shall not obstruct traffic or the safe operation of the gas pumps.

D. Pump Islands: Pump islands shall comply with the following performance standards:

1. Pump islands shall be elevated six inches (6") above the traveled surface of the site.

2. All pump islands shall be set at least thirty feet (30') back from any property line. Additionally, the setback between the pump islands' curb face shall be at least twenty four feet (24').

E. Dust Control And Drainage: The entire site, other than taken up by a building, structure, or plantings, shall be surfaced with asphalt, concrete, cobblestone, or paving brick. Plans for surfacing and drainage shall be subject to approval of the city engineer. Drainage from all fueling areas shall be directed to an oil/grit separator. Minimum design standards for the oil/grit separator shall include the following:

1. A minimum of four hundred (400) cubic feet of permanent pool storage capacity per acre of drainage area.

2. A minimum pool depth of four feet (4').

3. A minimum oil containment capacity of eight hundred (800) gallons.

4. Minimum maintenance inspection of two (2) times per year and/or after measurable spill events. A measurable spill shall be defined by the Minnesota pollution control agency (MPCA). Any measurable spill event shall be reported to the MPCA.

F. Landscaping:

1. Minimum required green area shall be in accordance with the provisions of chapter 10 of this title.

2. At the boundaries of the lot, the following landscape area shall be required:

a. From side and rear property lines, an area of not less than ten feet (10') wide shall be landscaped in compliance with chapter 10 of this title.

b. From all road rights of way, an area of not less than fifteen feet (15') wide shall be landscaped in compliance with chapter 10 of this title.

c. Where lots abut residentially zoned property, a buffer yard of not less than twenty feet (20') wide shall be landscaped and screened in accordance with section 11-5-4 and chapter 10 of this title.

d. The property owner shall be responsible for maintenance of all landscaping, including within the boulevard.

G. Exterior Lighting: The lighting shall be accomplished in such a way as to have no direct source of light visible from adjacent land in residential use or from the public right of way and shall be in compliance with section 11-4-7 of this title. A comprehensive lighting plan shall be submitted as part of the conditional use permit application, and shall be subject to the following performance standards:

1. Canopy Lighting: Canopy lighting under the canopy structure shall consist of canister spotlights recessed into the canopy. No portion of the light source or fixture may extend below the ceiling of the canopy. Total canopy illumination below the canopy shall not exceed one hundred fifteen (115) foot-candles at ground level.

2. Illumination: Maximum site illumination shall not exceed limits set forth in section 11-4-7 of this title.

3. Access: Vehicular access points shall create a minimum of conflict with through traffic movement and shall comply with chapter 9 of this title.

H. Circulation And Loading: The site design shall accommodate adequate turning radius and vertical clearance for a semitrailer truck. Designated loading areas shall be exclusive of off street parking stalls and drive aisles. A site plan shall be provided to illustrate adequate turning radius, using appropriate engineering templates.

I. Parking:

1. Parking spaces shall be calculated solely based upon the use(s) and the square footage of the principal building(s).

2. Parking spaces shall be screened from abutting residential properties in accordance with section 11-5-4 of this title.

J. Noise: Public address system shall not be audible at any property line. Playing of music or advertisement from the public address system is prohibited. Noise control shall be required as regulated by section 11-4-8 of this title.

K. Outside Storage, Sales And Service: No outside storage or sales shall be allowed, except as follows:

1. Public phones may be located on site as long as they do not interrupt on site traffic circulation and are not located in a yard abutting residentially zoned property.

2. Propane sales of twenty (20) pound capacity tanks may be located outside, provided the propane tanks are secured in a locker and meet all state and city building and fire codes.

3. A compressed air service area may be located on site as long as it does not interrupt on site traffic circulation.

L. Litter Control: The operation shall be responsible for litter control on the subject property, which is to occur on a daily basis. Trash receptacles shall be provided at convenient locations on site to facilitate litter control.

M. Additional Stipulations: All conditions pertaining to a specific site are subject to change when the city council, upon investigation in relation to a formal request, finds that the general welfare and public betterment can be served as well or better by modifying or expanding the conditions set forth herein.

Proposed Barsness Commercial Development
Aerial Overlay

BARSNESS 1ST ADDITION

ELKO NEW MARKET, MINNESOTA

PRELIMINARY DEVELOPMENT PLANS

FOR

WARREN BARSNESS

26836 GRAND AVENUE, ELKO, MN 55020

PHONE: (952) 461-2441

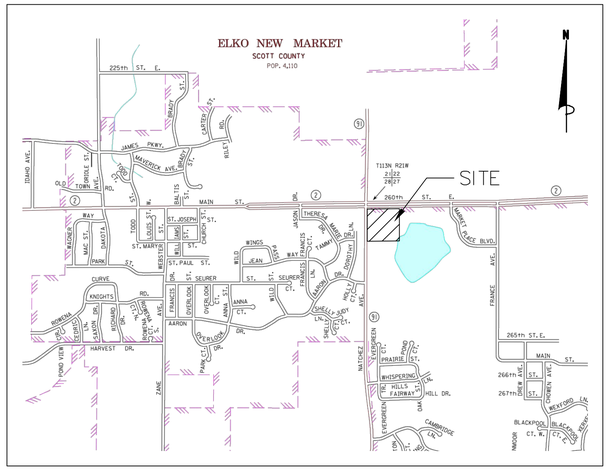
ELKO NEW MARKET
SCOTT COUNTY
POP. 4,110
SITE
T113N R21W
2/22
26/27
260th ST. E.
MAIN ST.
225th ST. E.
265th ST. E.
266th ST.
267th ST.
FRANCE AVE.
NATCHEZ AVE.
MAPLE GROVE BLVD.
HARVEST DR.
WHISPERING HILLS FAIRWAY
HILL DR.
BLACKPOOL CT. W.
BEAKFORD LN.
CAMBRIDGE LN.
ZANE
MAJESTIC WAY
MAJESTIC VIEW
KNIGHTS
SUMMIT
SALEM DR.
BROADMOOR
PARK CIR.
PERLOOK DR.
AARON
OVERLOOK
EVERGREEN
PRAIRIE ST.
BLUFF
SEUKER
ANNA
JEAN
WINGS
FRANCIS
TAMMY
CHRISTY
JASON
THERESA
ST. JOSEPH
CHURCH ST.
ST. MARTIN
ST. PAUL ST.
WESTSTREET
WILL LAND CT.
MAC ST.
JACKIE
PARK ST.
CURVE
RD.
TOWNSHIP RD.
OLD TOWN RD.
JAMES PKWY.
MAVERICK AVE.
BRIAN
LARRY
BILLY
SEAL
TOM
JOHN
ROSE
ROSE ST.
ROSE CT.
ROSE LN.
ROSE WAY
ROSE PARK
ROSE PARK CT.
ROSE PARK DR.
ROSE HILL
ROSE HILL CT.
ROSE HILL DR.
ROSE HILL WAY
ROSE HILL PL.
ROSE HILL ALLEY
ROSE HILL AVE.
ROSE HILL ST.
ROSE HILL CIR.
ROSE HILL LN.
ROSE HILL BLVD.
ROSE HILL PKWY.
ROSE HILL TRAIL
ROSE HILL TRAIL CT.
ROSE HILL TRAIL DR.
ROSE HILL TRAIL WAY
ROSE HILL TRAIL PL.
ROSE HILL TRAIL ALLEY
ROSE HILL TRAIL AVE.
ROSE HILL TRAIL ST.
ROSE HILL TRAIL CIR.
ROSE HILL TRAIL LN.
ROSE HILL TRAIL BLVD.
ROSE HILL TRAIL PKWY.
ROSE HILL TRAIL TRAIL
ROSE HILL TRAIL TRAIL CT.
ROSE HILL TRAIL TRAIL DR.
ROSE HILL TRAIL TRAIL WAY
ROSE HILL TRAIL TRAIL PL.
ROSE HILL TRAIL TRAIL ALLEY
ROSE HILL TRAIL TRAIL AVE.
ROSE HILL TRAIL TRAIL ST.
ROSE HILL TRAIL TRAIL CIR.
ROSE HILL TRAIL TRAIL LN.
ROSE HILL TRAIL TRAIL BLVD.
ROSE HILL TRAIL TRAIL PKWY.
ROSE HILL TRAIL TRAIL TRAIL
ROSE HILL TRAIL TRAIL TRAIL CT.
ROSE HILL TRAIL TRAIL TRAIL DR.
ROSE HILL TRAIL TRAIL TRAIL WAY
ROSE HILL TRAIL TRAIL TRAIL PL.
ROSE HILL TRAIL TRAIL TRAIL ALLEY
ROSE HILL TRAIL TRAIL TRAIL AVE.
ROSE HILL TRAIL TRAIL TRAIL ST.
ROSE HILL TRAIL TRAIL TRAIL CIR.
ROSE HILL TRAIL TRAIL TRAIL LN.
ROSE HILL TRAIL TRAIL TRAIL BLVD.
ROSE HILL TRAIL TRAIL TRAIL PKWY.
ROSE HILL TRAIL TRAIL TRAIL TRAIL
ROSE HILL TRAIL TRAIL TRAIL TRAIL CT.
ROSE HILL TRAIL TRAIL TRAIL TRAIL DR.
ROSE HILL TRAIL TRAIL TRAIL TRAIL WAY
ROSE HILL TRAIL TRAIL TRAIL TRAIL PL.
ROSE HILL TRAIL TRAIL TRAIL TRAIL ALLEY
ROSE HILL TRAIL TRAIL TRAIL TRAIL AVE.
ROSE HILL TRAIL TRAIL TRAIL TRAIL ST.
ROSE HILL TRAIL TRAIL TRAIL TRAIL CIR.
ROSE HILL TRAIL TRAIL TRAIL TRAIL LN.
ROSE HILL TRAIL TRAIL TRAIL TRAIL BLVD.
ROSE HILL TRAIL TRAIL TRAIL TRAIL PKWY.
ROSE HILL TRAIL TRAIL TRAIL TRAIL TRAIL
ROSE HILL TRAIL TRAIL TRAIL TRAIL TRAIL CT.
ROSE HILL TRAIL TRAIL TRAIL TRAIL TRAIL DR.
ROSE HILL TRAIL TRAIL TRAIL TRAIL TRAIL WAY
ROSE HILL TRAIL TRAIL TRAIL TRAIL TRAIL PL.
ROSE HILL TRAIL TRAIL TRAIL TRAIL TRAIL ALLEY
ROSE HILL TRAIL TRAIL TRAIL TRAIL TRAIL AVE.
ROSE HILL TRAIL TRAIL TRAIL TRAIL TRAIL ST.
ROSE HILL TRAIL TRAIL TRAIL TRAIL TRAIL CIR.
ROSE HILL TRAIL TRAIL TRAIL TRAIL TRAIL LN.
ROSE HILL TRAIL TRAIL TRAIL TRAIL TRAIL BLVD.
ROSE HILL TRAIL TRAIL TRAIL TRAIL TRAIL PKWY.
ROSE HILL TRAIL TRAIL TRAIL TRAIL TRAIL TRAIL
ROSE HILL TRAIL TRAIL TRAIL TRAIL TRAIL TRAIL CT.
ROSE HILL TRAIL TRAIL TRAIL TRAIL TRAIL TRAIL DR.
ROSE HILL TRAIL TRAIL TRAIL TRAIL TRAIL TRAIL WAY
ROSE HILL TRAIL TRAIL TRAIL TRAIL TRAIL TRAIL PL.
ROSE HILL TRAIL TRAIL TRAIL TRAIL TRAIL TRAIL ALLEY
ROSE HILL TRAIL TRAIL TRAIL TRAIL TRAIL TRAIL AVE.
ROSE HILL TRAIL TRAIL TRAIL TRAIL TRAIL TRAIL ST.
ROSE HILL TRAIL TRAIL TRAIL TRAIL TRAIL TRAIL CIR.
ROSE HILL TRAIL TRAIL TRAIL TRAIL TRAIL TRAIL LN.
ROSE HILL TRAIL TRAIL TRAIL TRAIL TRAIL TRAIL BLVD.
ROSE HILL TRAIL TRAIL TRAIL TRAIL TRAIL TRAIL PKWY.
ROSE HILL TRAIL TRAIL TRAIL TRAIL TRAIL TRAIL TRAIL
ROSE HILL TRAIL TRAIL TRAIL TRAIL TRAIL TRAIL TRAIL CT.
ROSE HILL TRAIL TRAIL TRAIL TRAIL TRAIL TRAIL TRAIL DR.
ROSE HILL TRAIL TRAIL TRAIL TRAIL TRAIL TRAIL TRAIL WAY
ROSE HILL TRAIL TRAIL TRAIL TRAIL TRAIL TRAIL TRAIL PL.
ROSE HILL TRAIL TRAIL TRAIL TRAIL TRAIL TRAIL TRAIL ALLEY
ROSE HILL TRAIL TRAIL TRAIL TRAIL TRAIL TRAIL TRAIL AVE.
ROSE HILL TRAIL TRAIL TRAIL TRAIL TRAIL TRAIL TRAIL ST.
ROSE HILL TRAIL TRAIL TRAIL TRAIL TRAIL TRAIL TRAIL CIR.
ROSE HILL TRAIL TRAIL TRAIL TRAIL TRAIL TRAIL TRAIL LN.
ROSE HILL TRAIL TRAIL TRAIL TRAIL TRAIL TRAIL TRAIL BLVD.
ROSE HILL TRAIL TRAIL TRAIL TRAIL TRAIL TRAIL TRAIL PKWY.
ROSE HILL TRAIL TRAIL TRAIL TRAIL TRAIL TRAIL TRAIL TRAIL
ROSE HILL TRAIL TRAIL TRAIL TRAIL TRAIL TRAIL TRAIL TRAIL CT.
ROSE HILL TRAIL TRAIL TRAIL TRAIL TRAIL TRAIL TRAIL TRAIL DR.
ROSE HILL TRAIL TRAIL TRAIL TRAIL TRAIL TRAIL TRAIL TRAIL WAY
ROSE HILL TRAIL TRAIL TRAIL TRAIL TRAIL TRAIL TRAIL TRAIL PL.
ROSE HILL TRAIL TRAIL TRAIL TRAIL TRAIL TRAIL TRAIL TRAIL ALLEY
ROSE HILL TRAIL TRAIL TRAIL TRAIL TRAIL TRAIL TRAIL TRAIL AVE.
ROSE HILL TRAIL TRAIL TRAIL TRAIL TRAIL TRAIL TRAIL TRAIL ST.
ROSE HILL TRAIL TRAIL TRAIL TRAIL TRAIL TRAIL TRAIL TRAIL CIR.
ROSE HILL TRAIL TRAIL TRAIL TRAIL TRAIL TRAIL TRAIL TRAIL LN.
ROSE HILL TRAIL TRAIL TRAIL TRAIL TRAIL TRAIL TRAIL TRAIL BLVD.
ROSE HILL TRAIL TRAIL TRAIL TRAIL TRAIL TRAIL TRAIL TRAIL PKWY.
ROSE HILL TRAIL TRAIL TRAIL TRAIL TRAIL TRAIL TRAIL TRAIL TRAIL
ROSE HILL TRAIL TRAIL TRAIL TRAIL TRAIL TRAIL TRAIL TRAIL TRAIL CT.
ROSE HILL TRAIL TRAIL TRAIL TRAIL TRAIL TRAIL TRAIL TRAIL TRAIL DR.
ROSE HILL TRAIL TRAIL TRAIL TRAIL TRAIL TRAIL TRAIL TRAIL TRAIL WAY
ROSE HILL TRAIL TRAIL TRAIL TRAIL TRAIL TRAIL TRAIL TRAIL TRAIL PL.
ROSE HILL TRAIL TRAIL TRAIL TRAIL TRAIL TRAIL TRAIL TRAIL TRAIL ALLEY
ROSE HILL TRAIL TRAIL TRAIL TRAIL TRAIL TRAIL TRAIL TRAIL TRAIL AVE.
ROSE HILL TRAIL TRAIL TRAIL TRAIL TRAIL TRAIL TRAIL TRAIL TRAIL ST.
ROSE HILL TRAIL TRAIL TRAIL TRAIL TRAIL TRAIL TRAIL TRAIL TRAIL CIR.
ROSE HILL TRAIL TRAIL TRAIL TRAIL TRAIL TRAIL TRAIL TRAIL TRAIL LN.
ROSE HILL TRAIL TRAIL TRAIL TRAIL TRAIL TRAIL TRAIL TRAIL TRAIL BLVD.
ROSE HILL TRAIL TRAIL TRAIL TRAIL TRAIL TRAIL TRAIL TRAIL TRAIL PKWY.
ROSE HILL TRAIL TRAIL TRAIL TRAIL TRAIL TRAIL TRAIL TRAIL TRAIL TRAIL
ROSE HILL TRAIL TRAIL TRAIL TRAIL TRAIL TRAIL TRAIL TRAIL TRAIL TRAIL CT.
ROSE HILL TRAIL TRAIL TRAIL TRAIL TRAIL TRAIL TRAIL TRAIL TRAIL TRAIL DR.
ROSE HILL TRAIL TRAIL TRAIL TRAIL TRAIL TRAIL TRAIL TRAIL TRAIL TRAIL WAY
ROSE HILL TRAIL TRAIL TRAIL TRAIL TRAIL TRAIL TRAIL TRAIL TRAIL TRAIL PL.
ROSE HILL TRAIL TRAIL TRAIL TRAIL TRAIL TRAIL TRAIL TRAIL TRAIL TRAIL ALLEY
ROSE HILL TRAIL TRAIL TRAIL TRAIL TRAIL TRAIL TRAIL TRAIL TRAIL TRAIL AVE.
ROSE HILL TRAIL TRAIL TRAIL TRAIL TRAIL TRAIL TRAIL TRAIL TRAIL TRAIL ST.
ROSE HILL TRAIL TRAIL TRAIL TRAIL TRAIL TRAIL TRAIL TRAIL TRAIL TRAIL CIR.
ROSE HILL TRAIL TRAIL TRAIL TRAIL TRAIL TRAIL TRAIL TRAIL TRAIL TRAIL LN.
ROSE HILL TRAIL TRAIL TRAIL TRAIL TRAIL TRAIL TRAIL TRAIL TRAIL TRAIL BLVD.
ROSE HILL TRAIL TRAIL TRAIL TRAIL TRAIL TRAIL TRAIL TRAIL TRAIL TRAIL PKWY.
ROSE HILL TRAIL TRAIL TRAIL TRAIL TRAIL TRAIL TRAIL TRAIL TRAIL TRAIL TRAIL
ROSE HILL TRAIL TRAIL TRAIL TRAIL TRAIL TRAIL TRAIL TRAIL TRAIL TRAIL TRAIL CT.
ROSE HILL TRAIL TRAIL TRAIL TRAIL TRAIL TRAIL TRAIL TRAIL TRAIL TRAIL TRAIL DR.
ROSE HILL TRAIL TRAIL TRAIL TRAIL TRAIL TRAIL TRAIL TRAIL TRAIL TRAIL TRAIL WAY
ROSE HILL TRAIL TRAIL TRAIL TRAIL TRAIL TRAIL TRAIL TRAIL TRAIL TRAIL TRAIL PL.
ROSE HILL TRAIL TRAIL TRAIL TRAIL TRAIL TRAIL TRAIL TRAIL TRAIL TRAIL TRAIL ALLEY
ROSE HILL TRAIL TRAIL TRAIL TRAIL TRAIL TRAIL TRAIL TRAIL TRAIL TRAIL TRAIL AVE.
ROSE HILL TRAIL TRAIL TRAIL TRAIL TRAIL TRAIL TRAIL TRAIL TRAIL TRAIL TRAIL ST.
ROSE HILL TRAIL TRAIL TRAIL TRAIL TRAIL TRAIL TRAIL TRAIL TRAIL TRAIL TRAIL CIR.
ROSE HILL TRAIL TRAIL TRAIL TRAIL TRAIL TRAIL TRAIL TRAIL TRAIL TRAIL TRAIL LN.
ROSE HILL TRAIL TRAIL TRAIL TRAIL TRAIL TRAIL TRAIL TRAIL TRAIL TRAIL TRAIL BLVD.
ROSE HILL TRAIL TRAIL TRAIL TRAIL TRAIL TRAIL TRAIL TRAIL TRAIL TRAIL TRAIL PKWY.
ROSE HILL TRAIL TRAIL TRAIL TRAIL TRAIL TRAIL TRAIL TRAIL TRAIL TRAIL TRAIL TRAIL
ROSE HILL TRAIL TRAIL TRAIL TRAIL TRAIL TRAIL TRAIL TRAIL TRAIL TRAIL TRAIL TRAIL CT.
ROSE HILL TRAIL TRAIL TRAIL TRAIL TRAIL TRAIL TRAIL TRAIL TRAIL TRAIL TRAIL TRAIL DR.
ROSE HILL TRAIL TRAIL TRAIL TRAIL TRAIL TRAIL TRAIL TRAIL TRAIL TRAIL TRAIL TRAIL WAY
ROSE HILL TRAIL TRAIL TRAIL TRAIL TRAIL TRAIL TRAIL TRAIL TRAIL TRAIL TRAIL TRAIL PL.
ROSE HILL TRAIL TRAIL TRAIL TRAIL TRAIL TRAIL TRAIL TRAIL TRAIL TRAIL TRAIL TRAIL ALLEY
ROSE HILL TRAIL TRAIL TRAIL TRAIL TRAIL TRAIL TRAIL TRAIL TRAIL TRAIL TRAIL TRAIL AVE.
ROSE HILL TRAIL TRAIL TRAIL TRAIL TRAIL TRAIL TRAIL TRAIL TRAIL TRAIL TRAIL TRAIL ST.
ROSE HILL TRAIL TRAIL TRAIL TRAIL TRAIL TRAIL TRAIL TRAIL TRAIL TRAIL TRAIL TRAIL CIR.
ROSE HILL TRAIL TRAIL TRAIL TRAIL TRAIL TRAIL TRAIL TRAIL TRAIL TRAIL TRAIL TRAIL LN.
ROSE HILL TRAIL TRAIL TRAIL TRAIL TRAIL TRAIL TRAIL TRAIL TRAIL TRAIL TRAIL TRAIL BLVD.
ROSE HILL TRAIL TRAIL TRAIL TRAIL TRAIL TRAIL TRAIL TRAIL TRAIL TRAIL TRAIL TRAIL PKWY.
ROSE HILL TRAIL TRAIL TRAIL TRAIL TRAIL TRAIL TRAIL TRAIL TRAIL TRAIL TRAIL TRAIL TRAIL
ROSE HILL TRAIL TRAIL TRAIL TRAIL TRAIL TRAIL TRAIL TRAIL TRAIL TRAIL TRAIL TRAIL TRAIL CT.
ROSE HILL TRAIL TRAIL TRAIL TRAIL TRAIL TRAIL TRAIL TRAIL TRAIL TRAIL TRAIL TRAIL TRAIL DR.
ROSE HILL TRAIL TRAIL TRAIL TRAIL TRAIL TRAIL TRAIL TRAIL TRAIL TRAIL TRAIL TRAIL TRAIL WAY
ROSE HILL TRAIL TRAIL TRAIL TRAIL TRAIL TRAIL TRAIL TRAIL TRAIL TRAIL TRAIL TRAIL TRAIL PL.
ROSE HILL TRAIL TRAIL TRAIL TRAIL TRAIL TRAIL TRAIL TRAIL TRAIL TRAIL TRAIL TRAIL TRAIL ALLEY
ROSE HILL TRAIL TRAIL TRAIL TRAIL TRAIL TRAIL TRAIL TRAIL TRAIL TRAIL TRAIL TRAIL TRAIL AVE.
ROSE HILL TRAIL TRAIL TRAIL TRAIL TRAIL TRAIL TRAIL TRAIL TRAIL TRAIL TRAIL TRAIL TRAIL ST.
ROSE HILL TRAIL TRAIL TRAIL TRAIL TRAIL TRAIL TRAIL TRAIL TRAIL TRAIL TRAIL TRAIL TRAIL CIR.
ROSE HILL TRAIL TRAIL TRAIL TRAIL TRAIL TRAIL TRAIL TRAIL TRAIL TRAIL TRAIL TRAIL TRAIL LN.
ROSE HILL TRAIL TRAIL TRAIL TRAIL TRAIL TRAIL TRAIL TRAIL TRAIL TRAIL TRAIL TRAIL TRAIL BLVD.
ROSE HILL TRAIL TRAIL TRAIL TRAIL TRAIL TRAIL TRAIL TRAIL TRAIL TRAIL TRAIL TRAIL TRAIL PKWY.
ROSE HILL TRAIL TRAIL TRAIL TRAIL TRAIL TRAIL TRAIL TRAIL TRAIL TRAIL TRAIL TRAIL TRAIL TRAIL
ROSE HILL TRAIL TRAIL TRAIL TRAIL TRAIL TRAIL TRAIL TRAIL TRAIL TRAIL TRAIL TRAIL TRAIL TRAIL CT.
ROSE HILL TRAIL TRAIL TRAIL TRAIL TRAIL TRAIL TRAIL TRAIL TRAIL TRAIL TRAIL TRAIL TRAIL TRAIL DR.
ROSE HILL TRAIL TRAIL TRAIL TRAIL TRAIL TRAIL TRAIL TRAIL TRAIL TRAIL TRAIL TRAIL TRAIL TRAIL WAY
ROSE HILL TRAIL TRAIL TRAIL TRAIL TRAIL TRAIL TRAIL TRAIL TRAIL TRAIL TRAIL TRAIL TRAIL TRAIL PL.
ROSE HILL TRAIL TRAIL TRAIL TRAIL TRAIL TRAIL TRAIL TRAIL TRAIL TRAIL TRAIL TRAIL TRAIL TRAIL ALLEY
ROSE HILL TRAIL TRAIL TRAIL TRAIL TRAIL TRAIL TRAIL TRAIL TRAIL TRAIL TRAIL TRAIL TRAIL TRAIL AVE.
ROSE HILL TRAIL TRAIL TRAIL TRAIL TRAIL TRAIL TRAIL TRAIL TRAIL TRAIL TRAIL TRAIL TRAIL TRAIL ST.
ROSE HILL TRAIL TRAIL TRAIL TRAIL TRAIL TRAIL TRAIL TRAIL TRAIL TRAIL TRAIL TRAIL TRAIL TRAIL CIR.
ROSE HILL TRAIL TRAIL TRAIL TRAIL TRAIL TRAIL TRAIL TRAIL TRAIL TRAIL TRAIL TRAIL TRAIL TRAIL LN.
ROSE HILL TRAIL TRAIL TRAIL TRAIL TRAIL TRAIL TRAIL TRAIL TRAIL TRAIL TRAIL TRAIL TRAIL TRAIL BLVD.
ROSE HILL TRAIL TRAIL TRAIL TRAIL TRAIL TRAIL TRAIL TRAIL TRAIL TRAIL TRAIL TRAIL TRAIL TRAIL PKWY.
ROSE HILL TRAIL TRAIL TRAIL TRAIL TRAIL TRAIL TRAIL TRAIL TRAIL TRAIL TRAIL TRAIL TRAIL TRAIL TRAIL
ROSE HILL TRAIL TRAIL TRAIL TRAIL TRAIL TRAIL TRAIL TRAIL TRAIL TRAIL TRAIL TRAIL TRAIL TRAIL TRAIL CT.
ROSE HILL TRAIL TRAIL TRAIL TRAIL TRAIL TRAIL TRAIL TRAIL TRAIL TRAIL TRAIL TRAIL TRAIL TRAIL TRAIL DR.
ROSE HILL TRAIL TRAIL TRAIL TRAIL TRAIL TRAIL TRAIL TRAIL TRAIL TRAIL TRAIL TRAIL TRAIL TRAIL TRAIL WAY
ROSE HILL TRAIL TRAIL TRAIL TRAIL TRAIL TRAIL TRAIL TRAIL TRAIL TRAIL TRAIL TRAIL TRAIL TRAIL TRAIL PL.
ROSE HILL TRAIL TRAIL TRAIL TRAIL TRAIL TRAIL TRAIL TRAIL TRAIL TRAIL TRAIL TRAIL TRAIL TRAIL TRAIL ALLEY
ROSE HILL TRAIL TRAIL TRAIL TRAIL TRAIL TRAIL TRAIL TRAIL TRAIL TRAIL TRAIL TRAIL TRAIL TRAIL TRAIL AVE.
ROSE HILL TRAIL TRAIL TRAIL TRAIL TRAIL TRAIL TRAIL TRAIL TRAIL TRAIL TRAIL TRAIL TRAIL TRAIL TRAIL ST.
ROSE HILL TRAIL TRAIL TRAIL TRAIL TRAIL TRAIL TRAIL TRAIL TRAIL TRAIL TRAIL TRAIL TRAIL TRAIL TRAIL CIR.
ROSE HILL TRAIL TRAIL TRAIL TRAIL TRAIL TRAIL TRAIL TRAIL TRAIL TRAIL TRAIL TRAIL TRAIL TRAIL TRAIL LN.
ROSE HILL TRAIL TRAIL TRAIL TRAIL TRAIL TRAIL TRAIL TRAIL TRAIL TRAIL TRAIL TRAIL TRAIL TRAIL TRAIL BLVD.
ROSE HILL TRAI

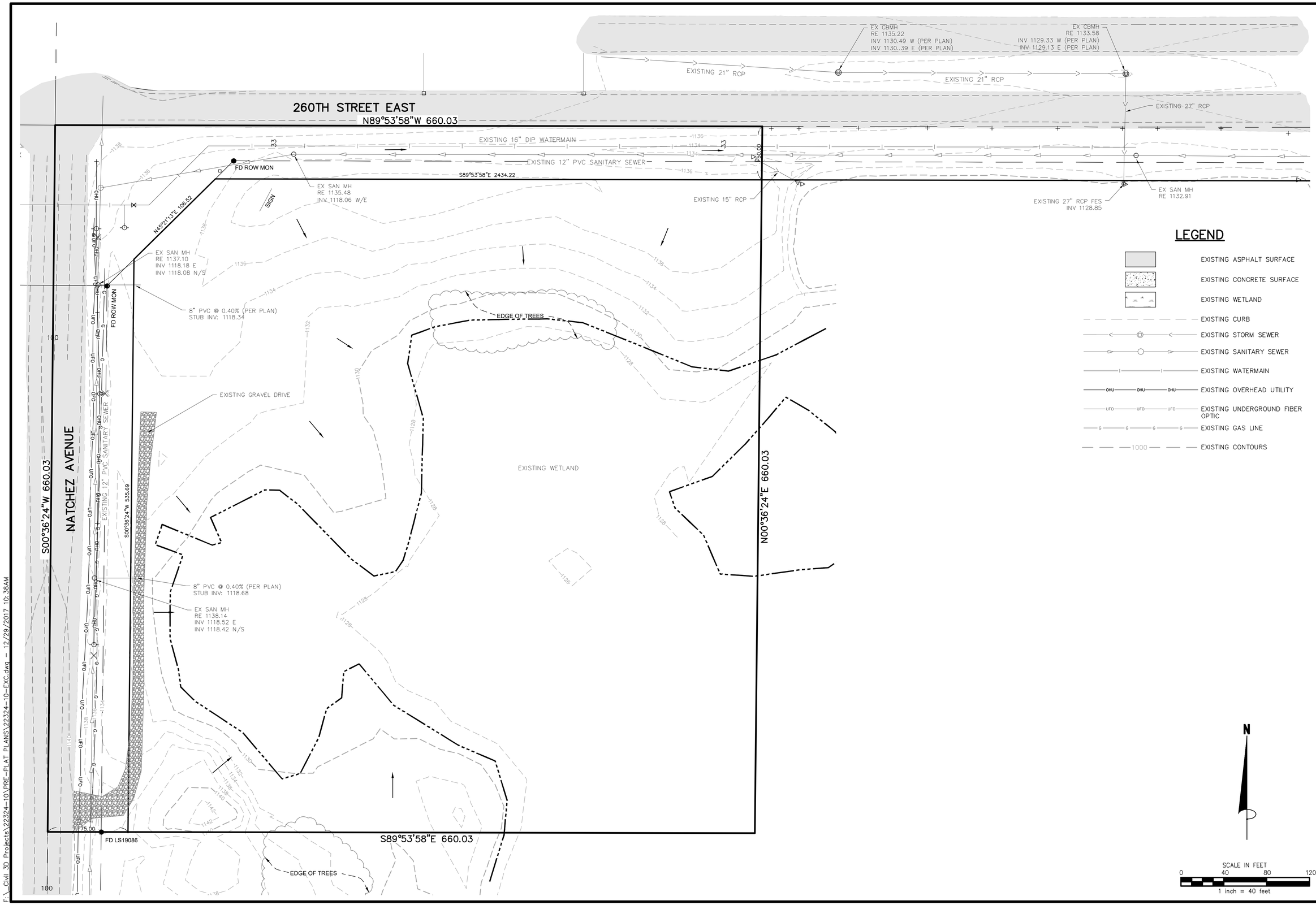

James R. Hill, Inc.
PLANNERS / ENGINEERS / SURVEYORS
2500 W. Cty. Rd. 42, Suite 120, Burnsville, MN 55337
PHONE: (952)890-6044 FAX: (952)890-6244

BARSNESS 1ST ADDITION

ELKO NEW MARKET, MINNESOTA

EXISTING CONDITIONS

FOR

WARREN BARSNESS

26836 GRAND AVENUE, ELKO,MN 55020

DRAWN BY	EPF
DATE	08/21/17
REVISIONS	
10/11/17 OWNER REV.	
12/29/17 INITIAL ISSUE	
CAD FILE	22324-10-EXC
PROJECT NO.	22324-10
	C1.2

F:\Civil 3D Projects\22324-10\PRE-PLAT PLANS\22324-10-EXC.dwg - 12/29/2017 10:38AM

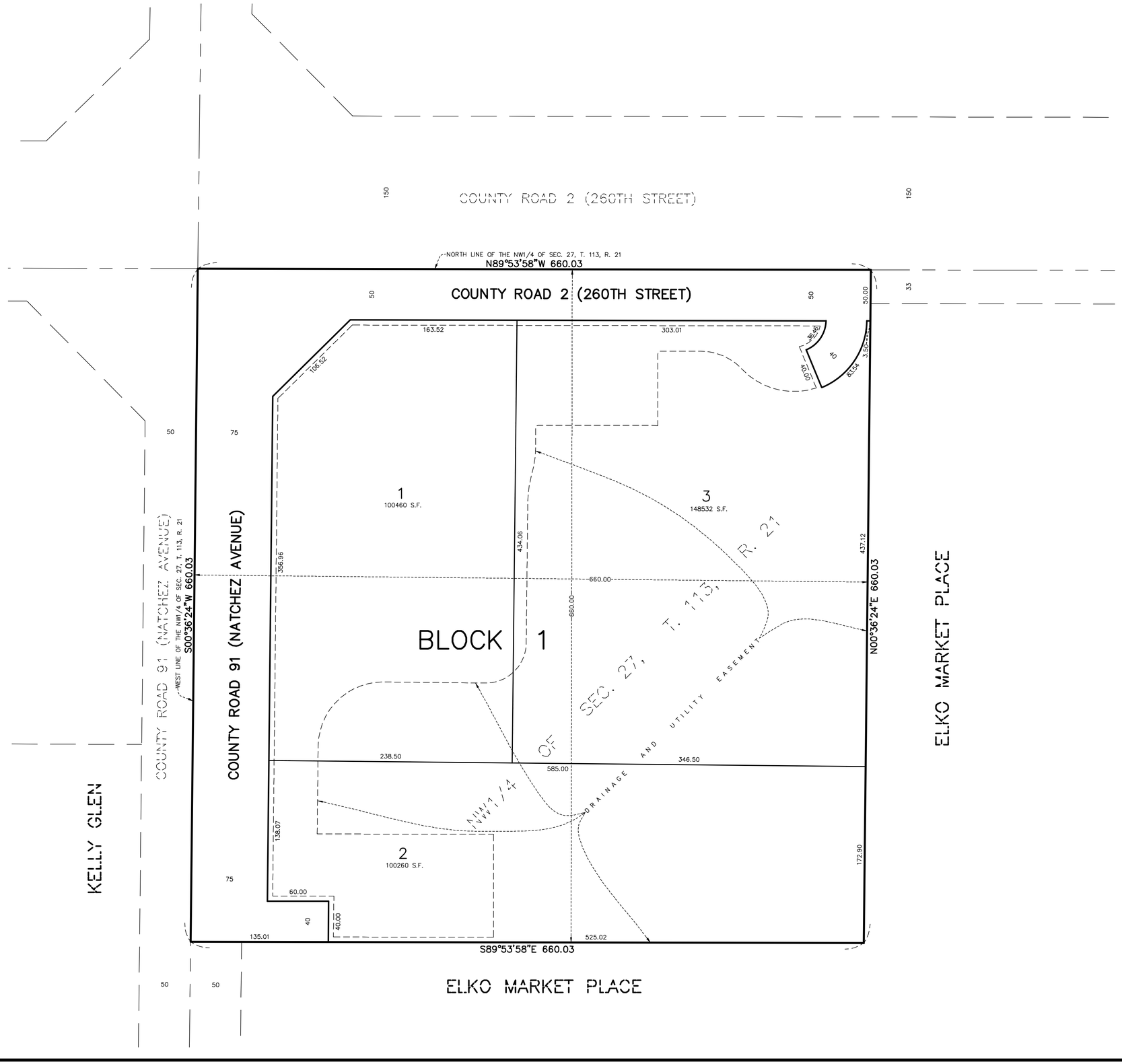

PROPERTY DESCRIPTION

The West 660.00 feet of the North 660.00 feet of the
Northwest Quarter of Section 27, Township 113, Range 21

CURRENT ZONING	B–1 (NEIGHBORHOOD BUSINESS DISTRICT
# OF LOTS	3 LOTS
GROSS	10.00 ACRES
RIGHT OF WAY	1.98 ACRES
LOT	8.02 ACRES
TOTAL	10.00 ACRES

DRAINAGE AND UTILITY EASEMENTS ARE SHOWN THUS:

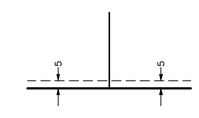

BEING 5 FEET IN WIDTH, UNLESS OTHERWISE INDICATED, ADJOINING RIGHT OF WAY LINES, AS SHOWN ON THE PLAT.

N

SCALE IN FEET
0 50 100 150
1 inch = 50 feet

James R. Hill, Inc.
PLANNERS / ENGINEERS / SURVEYORS
2500 W. Cty. Rd. 42, Suite 120, Burnsville, MN 55337
PHONE: (952)890–6044 FAX: (952)890–6244

BARSNESS 1ST ADDITION
ELKO NEW MARKET, MINNESOTA
PRELIMINARY PLAT
FOR
WARREN BARSNESS
26836 GRAND AVENUE, ELKO, MN 55020

DRAWN BY PLM
DATE 12/27/17
REVISIONS
CAD FILE 22324–10pp.dwg
PROJECT NO. 22324–10
C2.1

F:\Civil 3D Projects\22324-10\22324-10pp.dwg – 12/29/2017 10:39AM

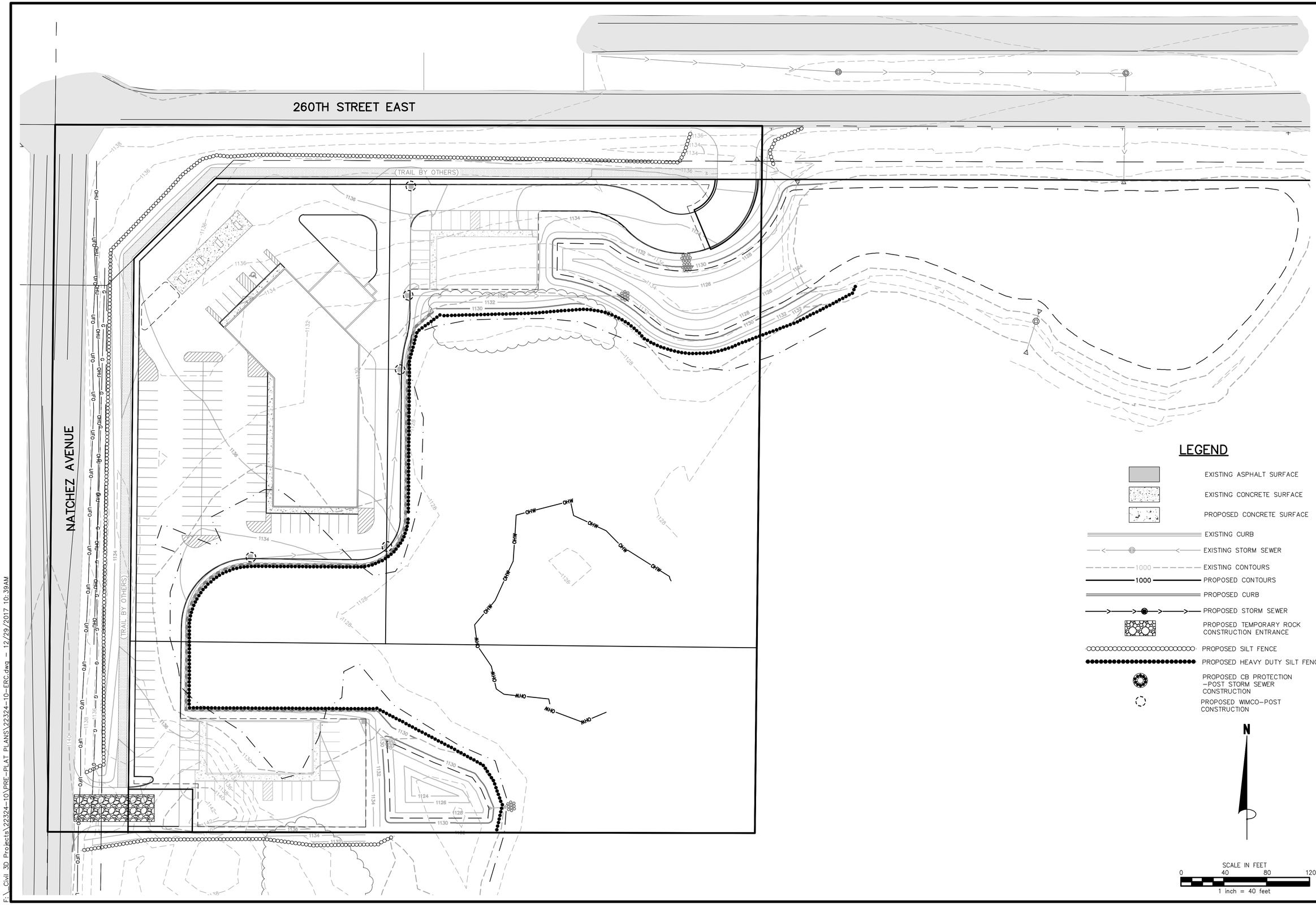

James R. Hill, Inc.
PLANNERS / ENGINEERS / SURVEYORS
2500 W. Cty. Rd. 42, Suite 120, Burnsville, MN 55337
PHONE: (952)890-6044 FAX: (952)890-6244

I hereby certify that this plan, specification or report was prepared by me or under my direct supervision and that I am a duly Licensed Professional Engineer under the laws of the State of Minnesota.

ERIC P. FAGERBERG

Date: 08/21/17 Reg.No. 53772

BARSNESS 1ST ADDITION

ELKO NEW MARKET, MINNESOTA

PRELIMINARY EROSION & SEDIMENT CONTROL PLAN

FOR

WARREN BARSNESS

26836 GRAND AVENUE, ELKO,MN 55020

DRAWN BY	EPF
DATE	08/21/17
REVISIONS	
10/11/17	OWNER REV.
12/29/17	INITIAL ISSUE
CAD FILE	22324-10-ERC
PROJECT NO.	22324-10
	C3.1

F:\Civil 3D Projects\22324-10\PRE-PLAT PLANS\22324-10-ERC.dwg - 12/29/2017 10:39AM

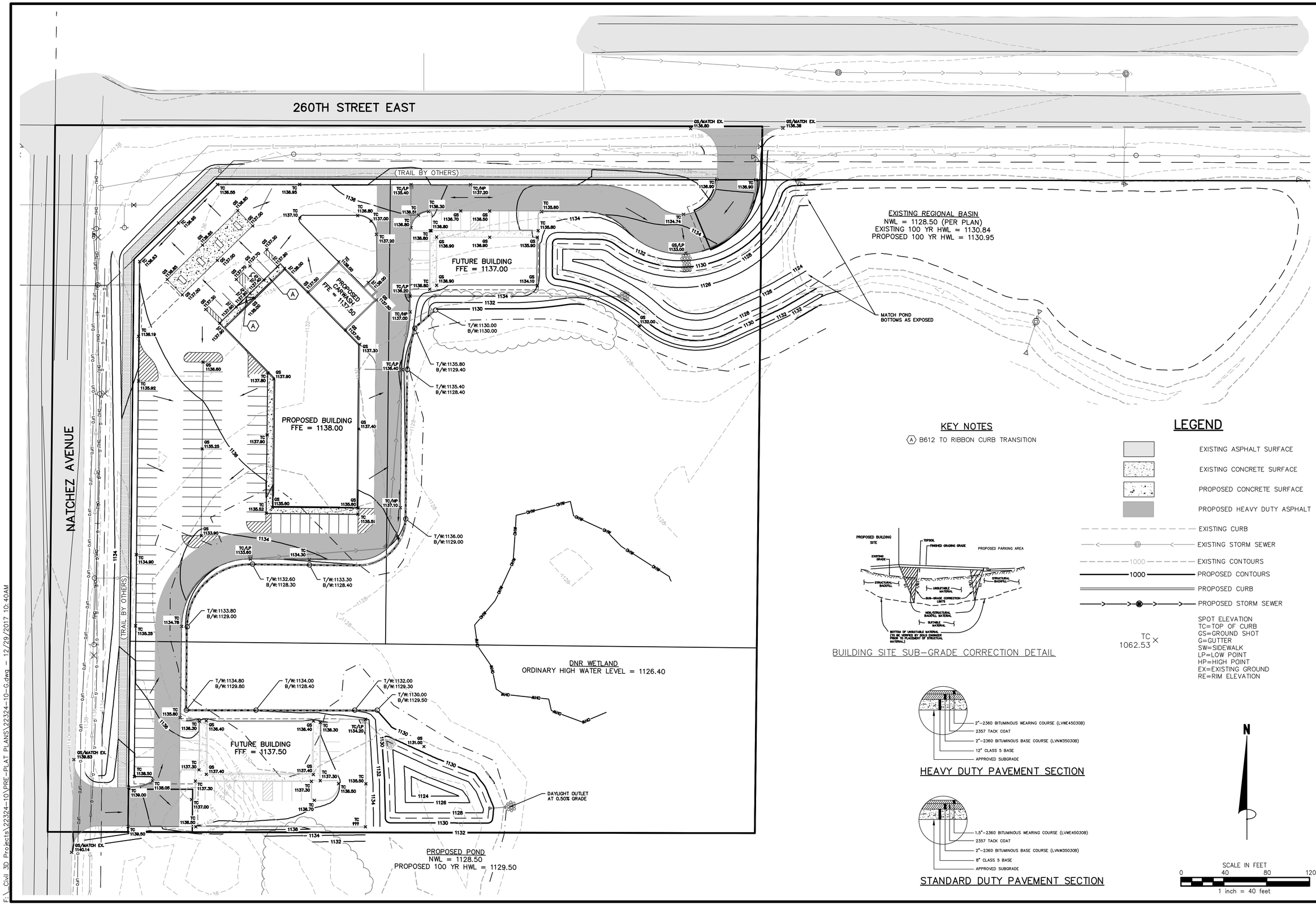

KEY NOTES

(A) B612 TO RIBBON CURB TRANSITION

LEGEND

- EXISTING ASPHALT SURFACE
- EXISTING CONCRETE SURFACE
- PROPOSED CONCRETE SURFACE
- PROPOSED HEAVY DUTY ASPHALT
- EXISTING CURB
- EXISTING STORM SEWER
- 1000 EXISTING CONTOURS
- 1000 PROPOSED CONTOURS
- PROPOSED CURB
- PROPOSED STORM SEWER

TC 1062.53 × SPOT ELEVATION
TC=TOP OF CURB
GS=GROUND SHOT
G=GUTTER
SW=SIDEWALK
LP=LOW POINT
HP=HIGH POINT
EX=EXISTING GROUND
RE=RIM ELEVATION

BUILDING SITE SUB-GRADE CORRECTION DETAIL

HEAVY DUTY PAVEMENT SECTION

STANDARD DUTY PAVEMENT SECTION

N

SCALE IN FEET
0 40 80 120
1 inch = 40 feet

James R. Hill, Inc.
PLANNERS / ENGINEERS / SURVEYORS
2500 W. Cty. Rd. 42, Suite 120, Burnsville, MN 55337
PHONE: (952)890-6044 FAX: (952)890-6244

I hereby certify that this plan, specification or report was prepared by me or under my direct supervision and that I am a duly Licensed Professional Engineer under the laws of the State of Minnesota.
ERIC P. FAGERBERG
Date: 08/21/17 Reg.No. 53772

BARSNESS 1ST ADDITION
ELKO NEW MARKET, MINNESOTA
PRELIMINARY GRADING & DRAINAGE PLAN
FOR
WARREN BARSNESS
26836 GRAND AVENUE, ELKO, MN 55020

DRAWN BY	EPF
DATE	08/21/17
REVISIONS	
10/11/17 OWNER REV.	
12/29/17 INITIAL ISSUE	
CAD FILE	22324-10-G
PROJECT NO.	22324-10
	C3.2

E:_Civil 3D Projects\22324-10\PRE-PLAT PLANS\22324-10-G.dwg - 12/29/2017 10:40AM

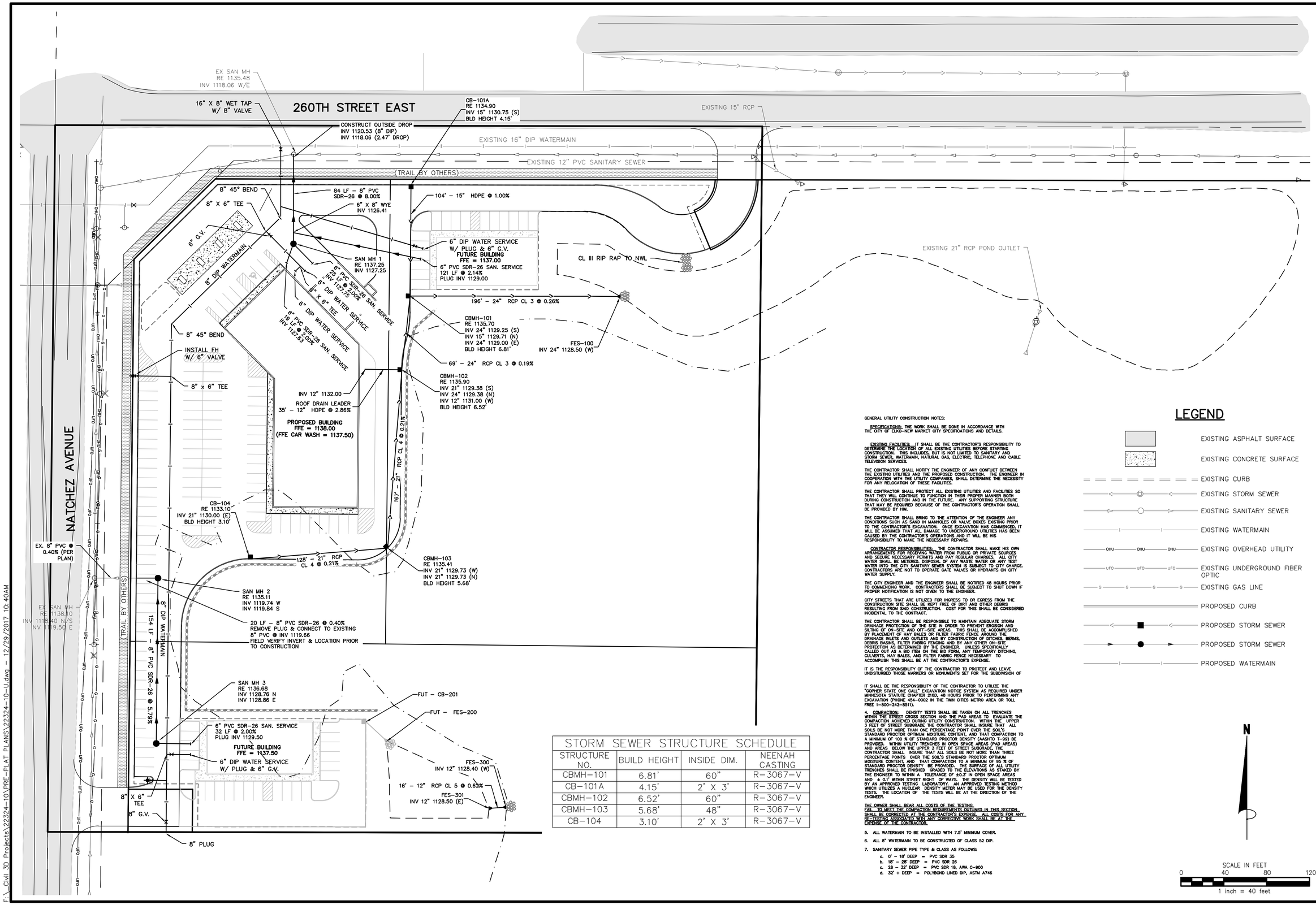

STORM SEWER STRUCTURE SCHEDULE			
STRUCTURE NO.	BUILD HEIGHT	INSIDE DIM.	NEENAH CASTING
CBMH-101	6.81'	60"	R-3067-V
CB-101A	4.15'	2' X 3'	R-3067-V
CBMH-102	6.52'	60"	R-3067-V
CBMH-103	5.68'	48"	R-3067-V
CB-104	3.10'	2' X 3'	R-3067-V

GENERAL UTILITY CONSTRUCTION NOTES:

SPECIFICATIONS: THE WORK SHALL BE DONE IN ACCORDANCE WITH THE CITY OF ELKO-NEW MARKET CITY SPECIFICATIONS AND DETAILS.

EXISTING FACILITIES: IT SHALL BE THE CONTRACTOR'S RESPONSIBILITY TO DETERMINE THE LOCATION OF ALL EXISTING UTILITIES BEFORE STARTING CONSTRUCTION. THIS INCLUDES, BUT IS NOT LIMITED TO SANITARY AND STORM SEWER, WATERMAIN, NATURAL GAS, ELECTRIC, TELEPHONE AND CABLE TELEVISION SERVICES.

THE CONTRACTOR SHALL NOTIFY THE ENGINEER OF ANY CONFLICT BETWEEN THE EXISTING UTILITIES AND THE PROPOSED CONSTRUCTION. THE ENGINEER IN COOPERATION WITH THE UTILITY COMPANIES, SHALL DETERMINE THE NECESSITY FOR ANY RELOCATION OF THESE FACILITIES.

THE CONTRACTOR SHALL PROTECT ALL EXISTING UTILITIES AND FACILITIES SO THAT THEY WILL CONTINUE TO FUNCTION IN THEIR PROPER MANNER BOTH DURING CONSTRUCTION AND IN THE FUTURE. ANY SUPPORTING STRUCTURE THAT MAY BE REQUIRED BECAUSE OF THE CONTRACTOR'S OPERATION SHALL BE PROVIDED BY HIM.

THE CONTRACTOR SHALL BRING TO THE ATTENTION OF THE ENGINEER ANY CONDITIONS SUCH AS SAND IN MANHOLES OR VALVE BOXES EXISTING PRIOR TO THE CONTRACTOR'S EXCAVATION. ONCE EXCAVATION HAS COMMENCED, IT WILL BE ASSUMED THAT ALL DAMAGE TO UNDERGROUND UTILITIES HAS BEEN CAUSED BY THE CONTRACTOR'S OPERATIONS AND IT WILL BE HIS RESPONSIBILITY TO MAKE THE NECESSARY REPAIRS.

CONTRACTOR RESPONSIBILITIES: THE CONTRACTOR SHALL MAKE HIS OWN ARRANGEMENTS FOR RECEIVING WATER FROM PUBLIC OR PRIVATE SOURCES AND SECURE NECESSARY PERMITS AND PAY REGULAR CHARGES. ALL CITY WATER SHALL BE METERED. DISPOSAL OF ANY WASTE WATER OR ANY TEST WATER INTO THE CITY SANITARY SEWER SYSTEM IS SUBJECT TO CITY CHARGE. CONTRACTORS ARE NOT TO OPERATE GATE VALVES OR HYDRANTS ON CITY WATER SUPPLY.

THE CITY ENGINEER AND THE ENGINEER SHALL BE NOTIFIED 48 HOURS PRIOR TO COMMENCING WORK. CONTRACTORS SHALL BE SUBJECT TO SHUT DOWN IF PROPER NOTIFICATION IS NOT GIVEN TO THE ENGINEER.

CITY STREETS THAT ARE UTILIZED FOR INGRESS TO OR EGRESS FROM THE CONSTRUCTION SITE SHALL BE KEPT FREE OF DIRT AND OTHER DEBRIS RESULTING FROM SAID CONSTRUCTION. COST FOR THIS SHALL BE CONSIDERED INCIDENTAL TO THE CONTRACT.

THE CONTRACTOR SHALL BE RESPONSIBLE TO MAINTAIN ADEQUATE STORM DRAINAGE PROTECTION OF THE SITE IN ORDER TO PREVENT EROSION AND SILTING OF ON-SITE AND OFF-SITE AREAS. THIS SHALL BE ACCOMPLISHED BY PLACEMENT OF HAY BALES OR FILTER FABRIC FENCE AROUND THE DRAINAGE INLETS AND OUTLETS AND BY CONSTRUCTION OF DITCHES, BERMS, DEBRIS BASINS, FILTER FABRIC FENCING AND BY ANY OTHER ON-SITE PROTECTION AS DETERMINED BY THE ENGINEER. UNLESS SPECIFICALLY CALLED OUT AS A BID ITEM ON THE BID FORM, ANY TEMPORARY DITCHING, CULVERTS, HAY BALES, AND FILTER FABRIC FENCE NECESSARY TO ACCOMPLISH THIS SHALL BE AT THE CONTRACTOR'S EXPENSE.

IT IS THE RESPONSIBILITY OF THE CONTRACTOR TO PROTECT AND LEAVE UNDISTURBED THOSE MARKERS OR MONUMENTS SET FOR THE SUBDIVISION OF

IT SHALL BE THE RESPONSIBILITY OF THE CONTRACTOR TO UTILIZE THE "GOPHER STATE ONE CALL" EXCAVATION NOTICE SYSTEM AS REQUIRED UNDER MINNESOTA STATUTE CHAPTER 216D, 48 HOURS PRIOR TO PERFORMING ANY EXCAVATION (PHONE 454-0002 IN THE TWIN CITIES METRO AREA OR TOLL FREE 1-800-242-8511).

4. COMPACTION: DENSITY TESTS SHALL BE TAKEN ON ALL TRENCHES WITHIN THE STREET CROSS SECTION AND THE PAD AREAS TO EVALUATE THE COMPACTION ACHIEVED DURING UTILITY CONSTRUCTION. WITHIN THE UPPER 3 FEET OF STREET SUBGRADE THE CONTRACTOR SHALL INSURE THAT ALL SOILS BE NOT MORE THAN ONE PERCENTAGE POINT OVER THE SOIL'S STANDARD PROCTOR OPTIMUM MOISTURE CONTENT, AND THAT COMPACTION TO A MINIMUM OF 100 % OF STANDARD PROCTOR DENSITY (AASHTO T-99) BE PROVIDED. WITHIN UTILITY TRENCHES IN OPEN SPACE AREAS (PAD AREAS) AND AREAS BELOW THE UPPER 3 FEET OF STREET SUBGRADE, THE CONTRACTOR SHALL INSURE THAT ALL SOILS BE NOT MORE THAN THREE PERCENTAGE POINTS OVER THE SOIL'S STANDARD PROCTOR OPTIMUM MOISTURE CONTENT, AND THAT COMPACTION TO A MINIMUM OF 95 % OF STANDARD PROCTOR DENISTY BE PROVIDED. THE SURFACE OF ALL UTILITY TRENCHES SHALL BE FINISHED GRADED TO THE ELEVATIONS AS STAKED BY THE ENGINEER TO WITHIN A TOLERANCE OF ±0.3' IN OPEN SPACE AREAS AND ± 0.1' WITHIN STREET RIGHT OF WAYS. THE DENSITY WILL BE TESTED BY AN APPROVED TESTING LABORATORY. AN APPROVED TESTING METHOD WHICH UTILIZES A NUCLEAR DENSITY METER MAY BE USED FOR THE DENSITY TESTS. THE LOCATION OF THE TESTS WILL BE AT THE DIRECTION OF THE ENGINEER.

THE OWNER SHALL BEAR ALL COSTS OF THE TESTING. FAIL TO MEET THE COMPACTION REQUIREMENTS OUTLINED IN THIS SECTION SHALL BE CORRECTED AT THE CONTRACTOR'S EXPENSE. ALL COSTS FOR ANY RE-TESTING ASSOCIATED WITH ANY CORRECTIVE WORK SHALL BE AT THE EXPENSE OF THE CONTRACTOR.

5. ALL WATERMAIN TO BE INSTALLED WITH 7.5' MINIMUM COVER.

6. ALL 8" WATERMAIN TO BE CONSTRUCTED OF CLASS 52 DIP.

7. SANITARY SEWER PIPE TYPE & CLASS AS FOLLOWS:
   a. 0' - 18' DEEP = PVC SDR 35
   b. 18' - 28' DEEP = PVC SDR 26
   c. 28 - 32' DEEP = PVC SDR 18, AWA C-900
   d. 32' + DEEP = POLYBOND LINED DIP, ASTM A746

James R. Hill, Inc.
PLANNERS / ENGINEERS / SURVEYORS
2500 W. Cty. Rd. 42, Suite 120, Burnsville, MN 55337
PHONE: (952)890-6044 FAX: (952)890-6244

I hereby certify that this plan, specification, or report was prepared by me or under my direct supervision and that I am a duly Licensed Professional Engineer under the laws of the State of Minnesota.
ERIC P. FAGERBERG
Date: 08/21/17 Reg.No. 53772

BARSNESS 1ST ADDITION
ELKO NEW MARKET, MINNESOTA
PRELIMINARY UTILITY PLAN
FOR
WARREN BARSNESS
26836 GRAND AVENUE, ELKO,MN 55020

DRAWN BY	EPF
DATE	08/21/17
REVISIONS	
10/11/17	OWNER REV.
12/29/17	INITIAL ISSUE
CAD FILE	22324-10-U
PROJECT NO.	22324-10
	C4.1

E:\Civil 3D Projects\22324-10\PRE-PLAT PLANS\22324-10-U.dwg - 12/29/2017 10:40AM

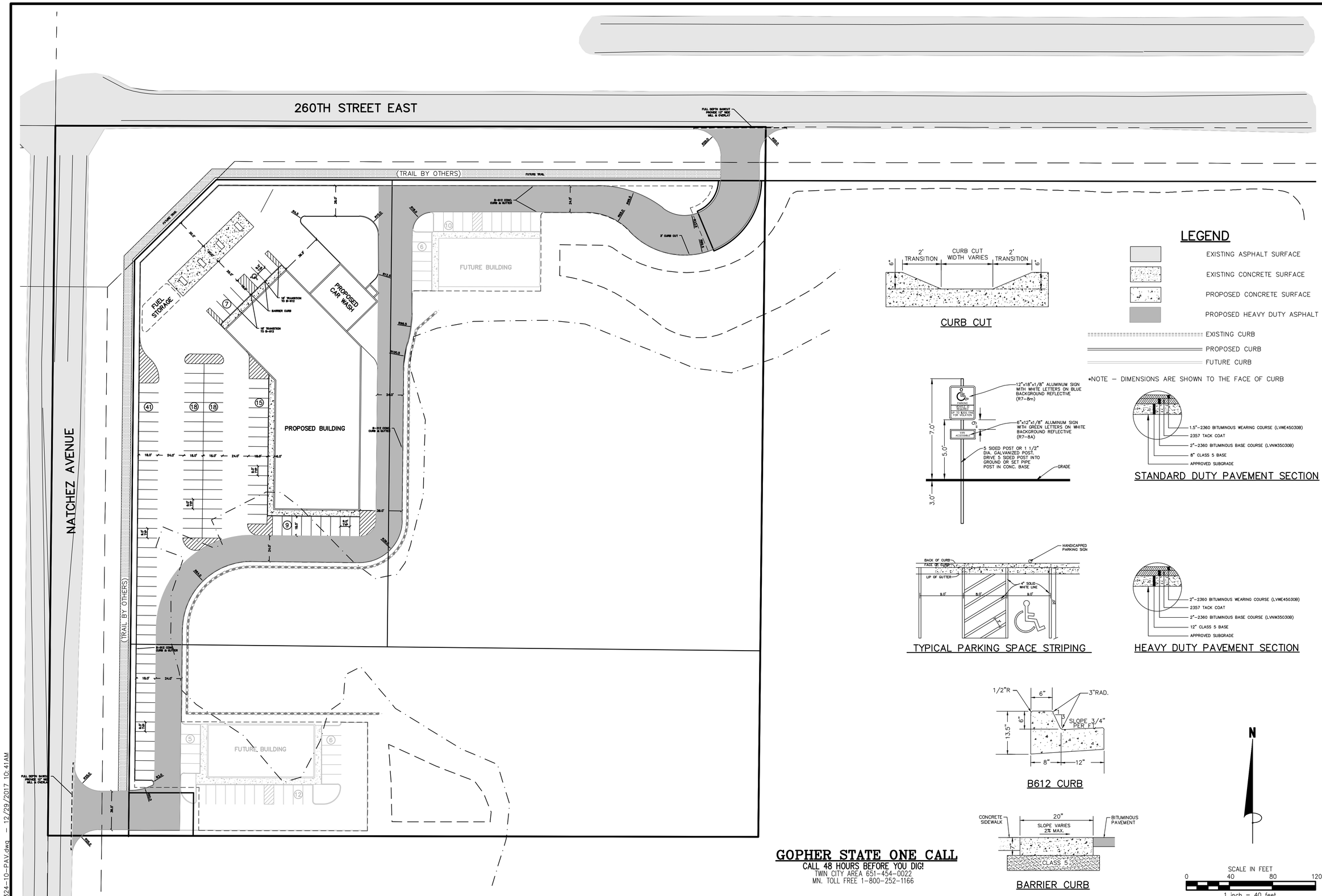

LEGEND

- EXISTING ASPHALT SURFACE
- EXISTING CONCRETE SURFACE
- PROPOSED CONCRETE SURFACE
- PROPOSED HEAVY DUTY ASPHALT
- EXISTING CURB
- PROPOSED CURB
- FUTURE CURB

*NOTE – DIMENSIONS ARE SHOWN TO THE FACE OF CURB

CURB CUT

STANDARD DUTY PAVEMENT SECTION

TYPICAL PARKING SPACE STRIPING

HEAVY DUTY PAVEMENT SECTION

B612 CURB

BARRIER CURB

N

SCALE IN FEET
0 40 80 120
1 inch = 40 feet

GOPHER STATE ONE CALL
CALL 48 HOURS BEFORE YOU DIG!
TWIN CITY AREA 651-454-0022
MN. TOLL FREE 1-800-252-1166

James R. Hill, Inc.
PLANNERS / ENGINEERS / SURVEYORS
2500 W. Cty. Rd. 42, Suite 120, Burnsville, MN 55337
PHONE: (952)890-6044 FAX: (952)890-6244

I hereby certify that this plan, specification or report was prepared by me or under my direct supervision and that I am a duly Licensed Professional Engineer under the laws of the State of Minnesota.
ERIC P. FAGERBERG
Date: 08/21/17 Reg.No. 53772

BARSNESS 1ST ADDITION
ELKO NEW MARKET, MINNESOTA
PRELIM. PAVING & DIMENSIONAL PLAN
FOR
WARREN BARSNESS
26836 GRAND AVENUE, ELKO,MN 55020

DRAWN BY	EPF
DATE	08/21/17
REVISIONS	
10/11/17 OWNER REV.	
12/29/17 INITIAL ISSUE	
CAD FILE	22324-10-PAV
PROJECT NO.	22324-10
	C5.1

22324-10-PAV.dwg – 12/29/2017 10:41AM

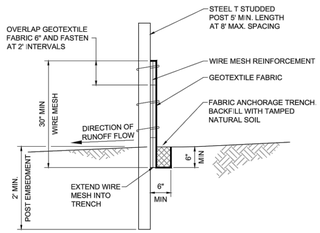

HEAVY DUTY SILT FENCE IS REQUIRED ADJACENT TO ALL WETLANDS

HEAVY DUTY SILT FENCE		STANDARD DETAIL
CITY OF ELKO NEW MARKET		NO. 3003ENM
		DATE 02/2017

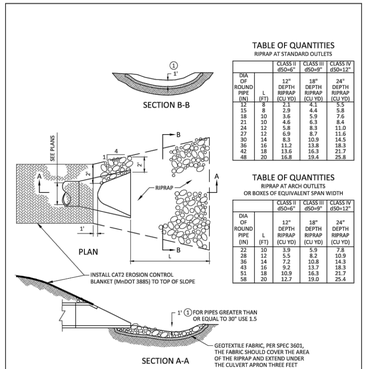

DIA OF ROUND PIPE (IN)	L (FT)	CLASS I 12" DEPTH RIPRAP (CU YD)	CLASS II 18" DEPTH RIPRAP (CU YD)	CLASS IV 24" DEPTH RIPRAP (CU YD)
12	8	2.1	4.1	5.5
15	8	2.9	4.4	5.8
18	10	3.6	5.9	7.6
21	12	4.8	6.3	8.4
24	12	5.8	8.3	11.0
27	12	6.9	8.7	11.6
30	14	8.3	10.9	14.5
36	16	11.2	13.8	18.3
42	18	13.6	16.3	21.7
48	20	16.8	19.4	25.8

DIA OF ROUND PIPE (IN)	L (FT)	12" DEPTH RIPRAP (CU YD)	18" DEPTH RIPRAP (CU YD)	24" DEPTH RIPRAP (CU YD)
22	10	3.9	5.9	7.8
36	14	7.2	10.8	14.3
43	16	9.2	13.7	18.3
51	18	10.9	16.3	21.7
58	20	12.7	19.0	25.4

APRON END RIPRAP DETAIL		STANDARD DETAIL
CITY OF ELKO NEW MARKET		NO. 3018ENM
		DATE MARCH 2009

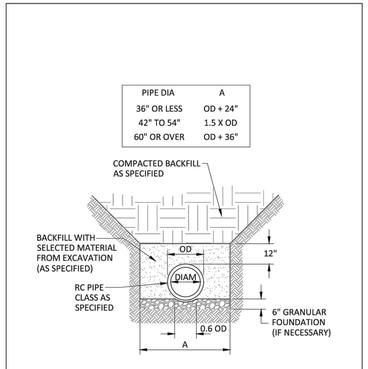

RC PIPE TRENCH		STANDARD DETAIL
CITY OF ELKO NEW MARKET		NO. 4002ENM
		DATE 02/2017

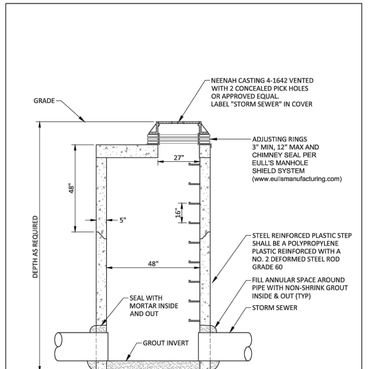

STORM SEWER STRUCTURE		STANDARD DETAIL
CITY OF ELKO NEW MARKET		NO. 4006ENM
		DATE 02/2017

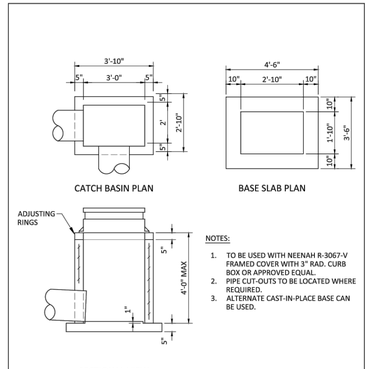

NOTES:

1. TO BE USED WITH NEENAH R-3067-V FRAMED COVER WITH 3" RAD. CURB BOX OR APPROVED EQUAL.
2. PIPE CUT-OUTS TO BE LOCATED WHERE REQUIRED.
3. ALTERNATE CAST-IN-PLACE BASE CAN BE USED.

2'X3' CATCH BASIN		STANDARD DETAIL
CITY OF ELKO NEW MARKET		NO. 4029ENM
		DATE 02/2017

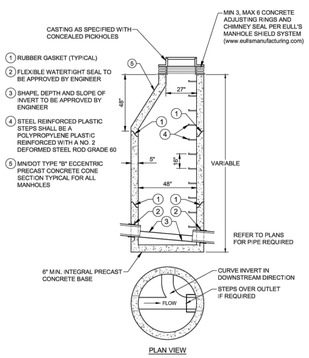

SANITARY SEWER MANHOLE		STANDARD DETAIL
CITY OF ELKO NEW MARKET		NO. 5001ENM
		DATE 02/2017

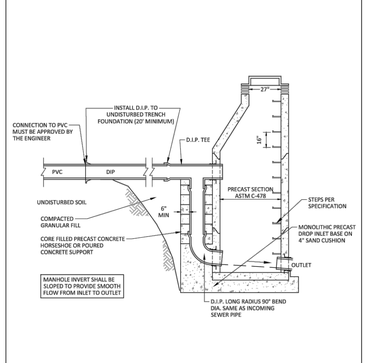

TYPICAL DROP MANHOLE		STANDARD DETAIL
CITY OF ELKO NEW MARKET		NO. 5003ENM
		DATE 02/2017

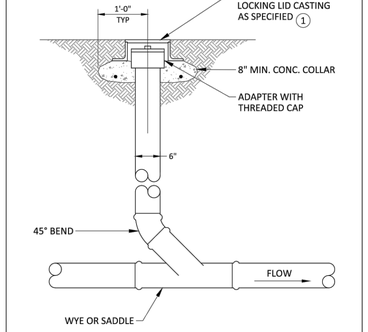

1 THE LID CASTING APPLIES ONLY TO CLEANOUTS LOCATED IN DRIVEWAYS, WALKS OR PAVED AREAS

SANITARY SEWER CLEANOUT DETAIL		STANDARD DETAIL
CITY OF ELKO NEW MARKET		NO. 5004ENM
		DATE 02/2017

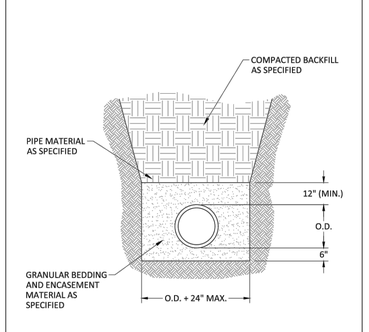

PVC SANITARY SEWER TRENCH		STANDARD DETAIL
CITY OF ELKO NEW MARKET		NO. 5005ENM
		DATE 02/2017

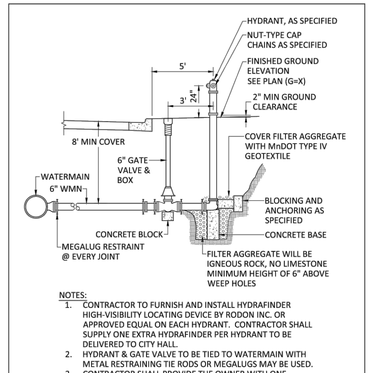

NOTES:

1. CONTRACTOR TO FURNISH AND INSTALL HYDRAFINDER HIGH-VISIBILITY LOCATING DEVICE BY RODON INC. OR APPROVED EQUAL ON EACH HYDRANT. CONTRACTOR SHALL SUPPLY ONE EXTRA HYDRAFINDER PER HYDRANT TO BE DELIVERED TO CITY HALL.
2. HYDRANT & GATE VALVE TO BE TIED TO WATERMAIN WITH METAL RESTRAINING TIE RODS OR MEGALUGS MAY BE USED.
3. CONTRACTOR SHALL PROVIDE THE OWNER WITH ONE HYDRANT WRENCH FOR EVERY PROJECT.
4. HYDRANTS LOCATED WHERE THE GROUNDWATER TABLE IS ABOVE THE DRAIN OUTLET SHALL HAVE THE OUTLET PLUGGED AND SHALL BE IDENTIFIED BY PAINTING THE LARGE PUMPER NOZZLE BLACK.

HYDRANT INSTALLATION		STANDARD DETAIL
CITY OF ELKO NEW MARKET		NO. 6001ENM
		DATE 02/2017

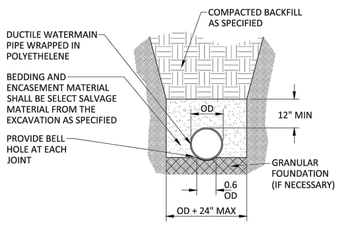

DUCTILE WATERMAIN TRENCH DETAIL		STANDARD DETAIL
CITY OF ELKO NEW MARKET		NO. 6007ENM
		DATE 02/2017

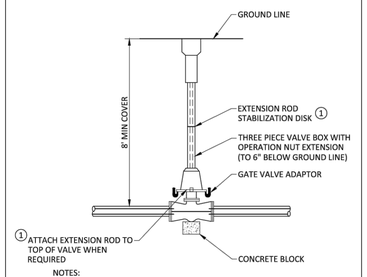

NOTES:

1 EXTENSION RODS ATTACHED TO THE GATE VALVES ARE REQUIRED ON ANY GATE VALVE GREATER THAN EIGHT FEET IN DEPTH FROM THE FINISHED SURFACE. THEY ARE ALSO REQUIRED IN AREAS OF HIGH GROUND WATER. TOP OF THE EXTENSION ROD MUST BE WITHIN 12-INCHES OF THE FINISHED SURFACE.

2 ONE GATE VALVE KEY SHALL BE FURNISHED PER PROJECT.

3 GATE VALVE SHALL BE THE TYPE SPECIFIED IN THE CITY OF ELKO NEW MARKET STANDARD SPECIFICATIONS.

GATE VALVE & BOX		STANDARD DETAIL
CITY OF ELKO NEW MARKET		NO. 6010ENM
		DATE 02/2017

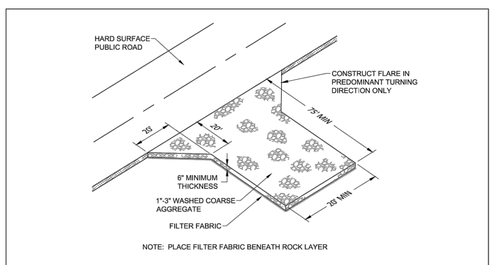

NOTE: PLACE FILTER FABRIC BENEATH ROCK LAYER

TEMPORARY ROCK CONSTRUCTION ACCESS		STANDARD DETAIL
CITY OF ELKO NEW MARKET		NO. 3005ENM
		DATE 02/2017

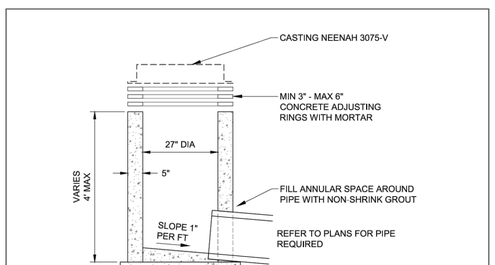

CATCH BASIN		STANDARD DETAIL
CITY OF ELKO NEW MARKET		NO. 4005ENM
		DATE 02/2017

James R. Hill, Inc.
PLANNERS / ENGINEERS / SURVEYORS
2500 W. Cty. Rd. 42, Suite 120, Burnsville, MN 55337
PHONE: (952)890-6044 FAX: (952)890-6244

I hereby certify that this plan, specification or report was prepared by me or under my direct supervision and that I am a duly Licensed Professional Engineer under the laws of the State of Minnesota.

ERIC P. FAGERBERG

Date: 08/21/17 Reg.No. 53772

BARSNESS 1ST ADDITION

ELKO NEW MARKET, MINNESOTA

DETAILS

FOR

WARREN BARSNESS

26836 GRAND AVENUE, ELKO,MN 55020

DRAWN BY	EPF
DATE	08/21/17
REVISIONS	
10/11/17	OWNER REV.
12/29/17	INITIAL ISSUE
CAD FILE	22324-10-D
PROJECT NO.	22324-10
	C6.1

F:_Civil 3D Projects\22324-10\PRE-PLAT PLANS\22324-10-D.dwg - 12/29/2017 10:41AM

PLANT MATERIAL LEGEND

SYM.	QUANTITY	COMMON NAME	BOTANICAL NAME	SIZE/ROOT	REMARKS
A	17	SKYLINE HONEYLOCUST	GLEDITSIA TRIACANTHOS VAR. INERMIS	2 1/2" DIA. BALLED AND BURLAPPED	
B	4	ACCOLADE ELM	ULMUS JAPONICA X WILSONIANA 'MORTON'	2 1/2" DIA. BALLED AND BURLAPPED	
C	7	PRAIRIE CASCADE WILLOW	SALIX 'PRAIRIE CASCADE'	2 1/2" DIA. BALLED AND BURLAPPED	
D	3	BLACK HILLS SPRUCE	PICEA GLAUCA DENSATA	8'-0" HIGH MIN. BALLED AND BURLAPPED	
E	3	CRAB - PINK SPIRE	MALUS 'PINK SPIRES'	1 1/2" DIA. BALLED AND BURLAPPED	
F	12	GOLDFLAME SPIREA	SPIREA X BUMALDA 'GOLDFLAME'	#5 CONTAINER	
G	44	MUGO DWARF	PINUS MUGO PUMILIO	#5 CONTAINER	
H					
I					
J					
K					

LANDSCAPE NOTES:

1. SEED MIX "A" SHALL BE - MN DOT #25-141 (COMMERCIAL TURF GRASS MIX FOR ALL DISTURBED AREAS THAT ARE NOT SPECIFICALLY MARKED). PLACE SEED AT A RATE OF 59 LBS. PER ACRE WITH 10-10-10 NPK FERTILIZER (200LB/ACRE) ALONG WITH MN DOT TYPE1 MULCH AT A RATE OF 2 TONS PER ACRE.

2. SEED ALL OTHER AREAS THAT ARE DISTURBED DURING CONSTRUCTION WITH SEED MIX "A".

3. PROVIDE CLEAN STRAW FREE OF WEED SEEDS FOR MULCH OVER THE SEEDED AREAS OR APPLY SEED VIA HYDROSEEDING METHOD.

4. WOOD FIBER BLANKET TO BE PROVIDED AT ALL SEEDED AREAS ON ANY SLOPE 3:1 OR GREATER.

5. ROCK MULCH TO BE 1 1/2" RIVER ROCK - VERIFY PRIOR TO PLACEMENT - ROCK MULCH TO BE USED AT GENERAL PLANT BEDS (3"-4" DEEP).

6. SHRUB BEDS TO HAVE EDGER (NOT REQUIRED WHERE SHRUB BED MEETS CONC WALK). EDGER TO BE VALLEY VIEW BLACK DIAMOND, 20' LENGTHS OR APPROVED EQUAL. SPLICES TO BE JOINED BETWEEN PIECES. ANCHORS/STAKES TO BE USED - 4 MIN PER LENGTH.

7. SHRUB BEDS TO HAVE "TYPAR" WEED FABRIC. OVERLAY FABRIC WITH ROCK MULCH. POLY SHEETING WILL NOT BE USED AT GENERAL PLANT BEDS WHERE PLANTINGS PROPOSED.

8. FINELY SHREDDED HARDWOOD MULCH SHALL BE INSTALLED UNDER ALL TREES AND SHRUBS THAT ARE NOT PART OF A GENERAL PLANTING BED.

9. PLANTS TO BE MAINTAINED BY LANDSCAPE CONTRACTOR WITH MANUAL WATERING OR WATER TRUCK UNTIL OWNER OCCUPIES THE EXPANSION.

10. UNDERGROUND UTILITIES TO BE LOCATED, BY THE CONTRACTOR PERFORMING THE WORK, PRIOR TO ANY EXCAVATION.

11. LANDSCAPE CONTRACTOR TO DO STAKING AS REQUIRED FOR PLANTINGS.

12. LANDSCAPE CONTRACTOR TO STRIP TOPSOIL FROM MAINTENANCE EDGER. MULCH TO BE PLACED AND COMPACTED AS REQUIRED.

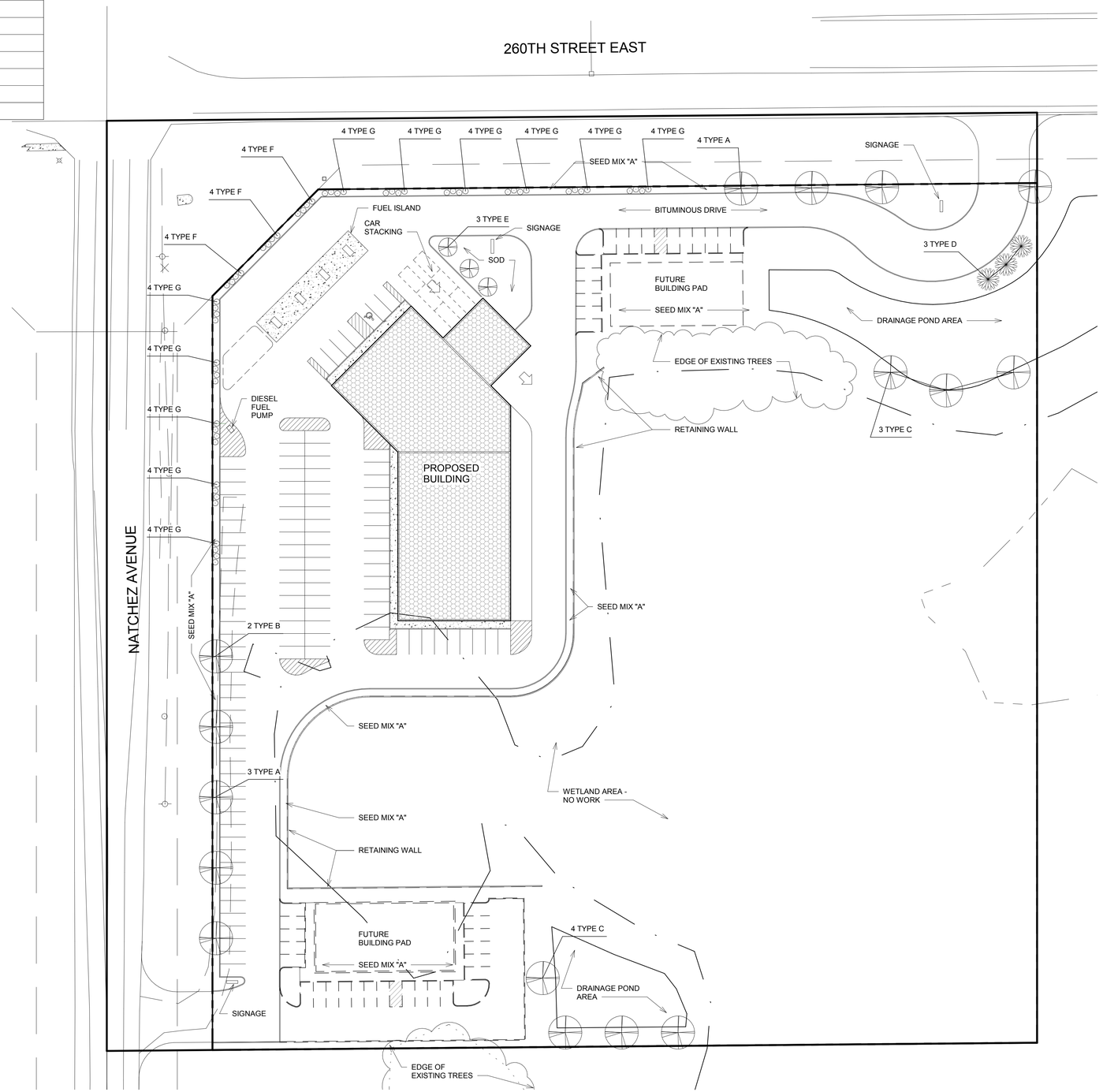

1 A1-1 LANDSCAPE PLAN
1" = 40'-0"

NORTH

40' 20' 0' 40'

APPRO DEVELOPMENT
design | build | develop

21476 GRENADA AVENUE
LAKEVILLE, MN 55044
PH: 952-469-2171
FAX: 952-469-2173
EMAIL:
office@approdevelopment.com

PRELIMINARY
NOT FOR CONSTRUCTION

No.	Description	Date

ELKO NEW MARKET PLACE

ELKO NEW MARKET, MN

LANDSCAPE PLAN

Project number	17-04-0160
Date	12/22/17
Drawn by	JAC
Checked by	JJC

A1-1

Scale As indicated

12/22/2017 3:46:14 PM

These drawings are for conceptual use only and are not intended for construction. Values represented are an approximation generated from manufacturers photometric inhouse or independent lab tests with data supplied by lamp manufacturers.

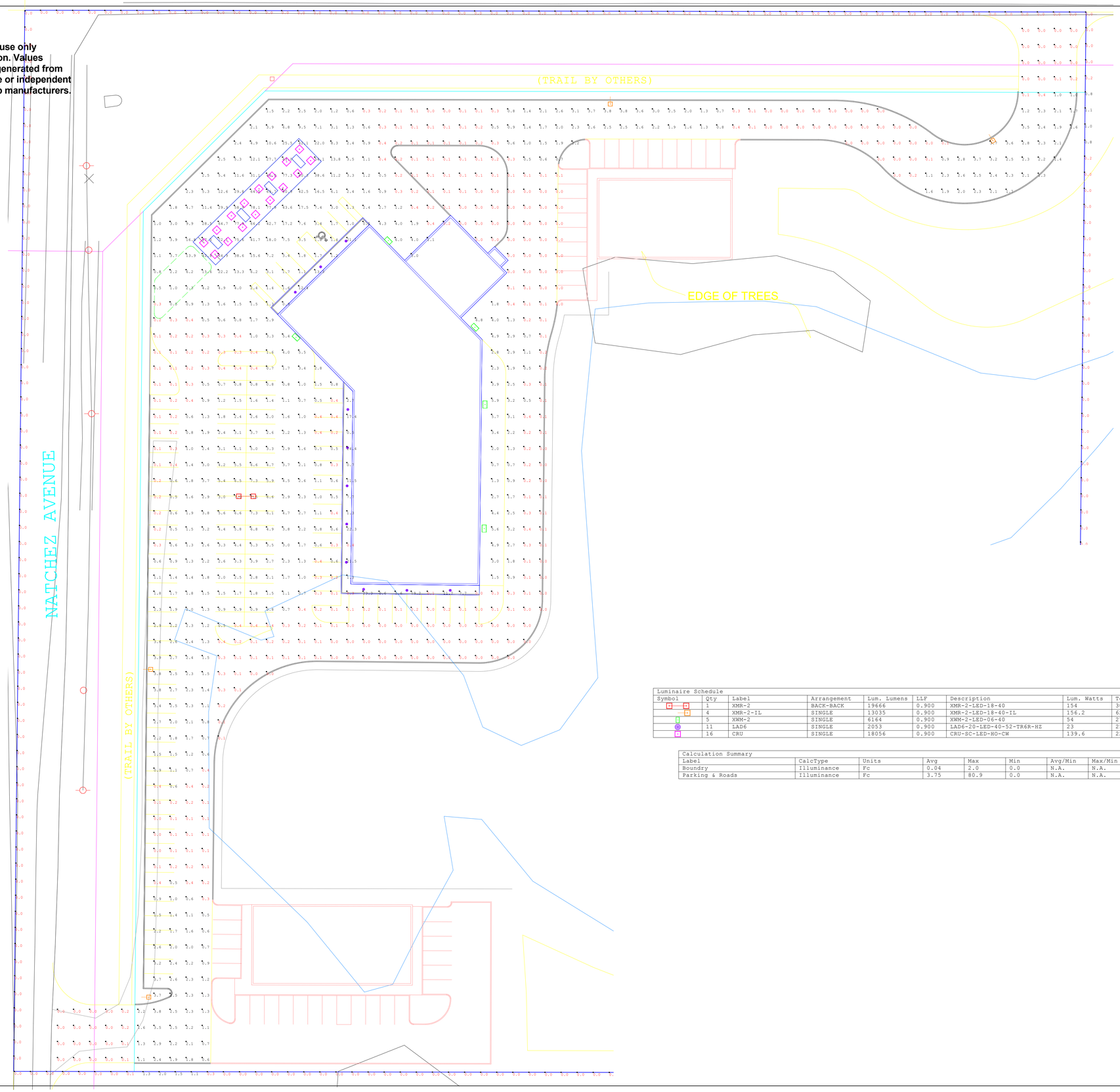

Luminaire Schedule								
Symbol	Qty	Label	Arrangement	Lum. Lumens	LLF	Description	Lum. Watts	Total Watts
	1	XMR-2	BACK-BACK	19666	0.900	XMR-2-LED-18-40	154	308
	4	XMR-2-IL	SINGLE	13035	0.900	XMR-2-LED-18-40-IL	156.2	624.8
	5	XWM-2	SINGLE	6164	0.900	XWM-2-LED-06-40	54	270
	11	LAD6	SINGLE	2053	0.900	LAD6-20-LED-40-52-TR6R-HZ	23	253
	16	CRU	SINGLE	18056	0.900	CRU-SC-LED-HO-CW	139.6	2233.6

Calculation Summary							
Label	CalcType	Units	Avg	Max	Min	Avg/Min	Max/Min
Boundry	Illuminance	Fc	0.04	2.0	0.0	N.A.	N.A.
Parking & Roads	Illuminance	Fc	3.75	80.9	0.0	N.A.	N.A.

Luma Sales Associates
Lighting and Controls

Luma Sales: Mark Latham
Layout By: Joe Frey
Date:11/21/2017
Filename: LS952-2877.AGI

Project:
C Store Commercial Project

Details:
Site Lighting

APPRO DEVELOPMENT
design | build | develop

21476 GRENADA AVENUE
LAKEVILLE, MN 55044
PH: 952-469-2171
FAX: 952-469-2173
EMAIL:
office@approdevelopment.com

PRELIMINARY
NOT FOR CONSTRUCTION

No.	Description	Date

ELKO NEW MARKET PLACE

ELKO NEW MARKET, MN

LIGHTING PLAN

Project number	17-04-0160
Date	12/11/17
Drawn by	JAC
Checked by	JJC

A1-2

Scale

12/10/2017 10:38:38 AM

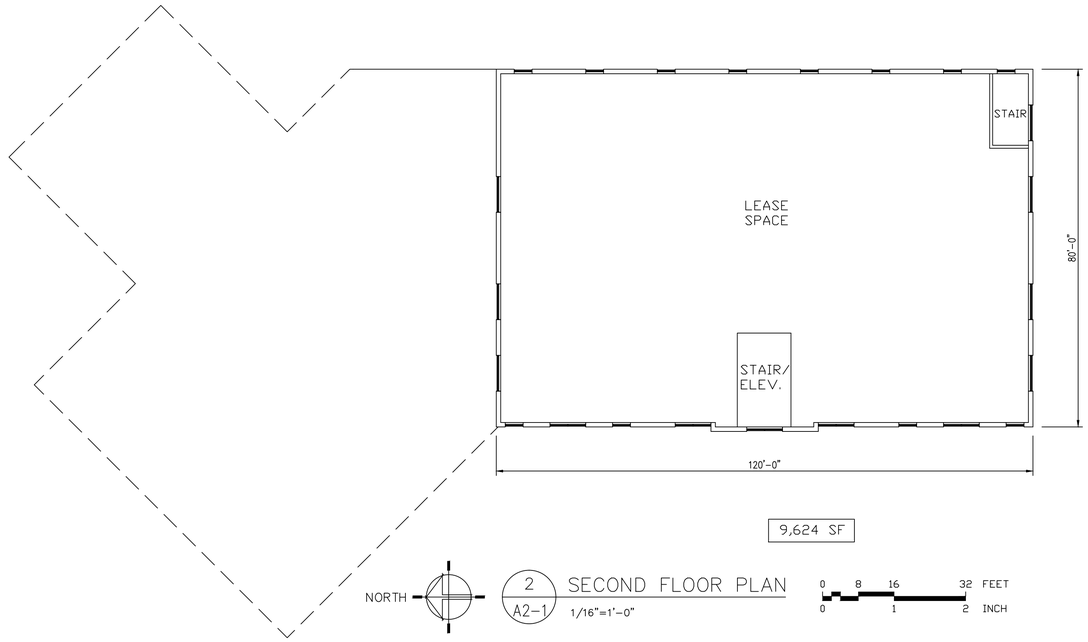

2 A2-1 SECOND FLOOR PLAN
1/16"=1'-0"

0 8 16 32 FEET
0 1 2 INCH

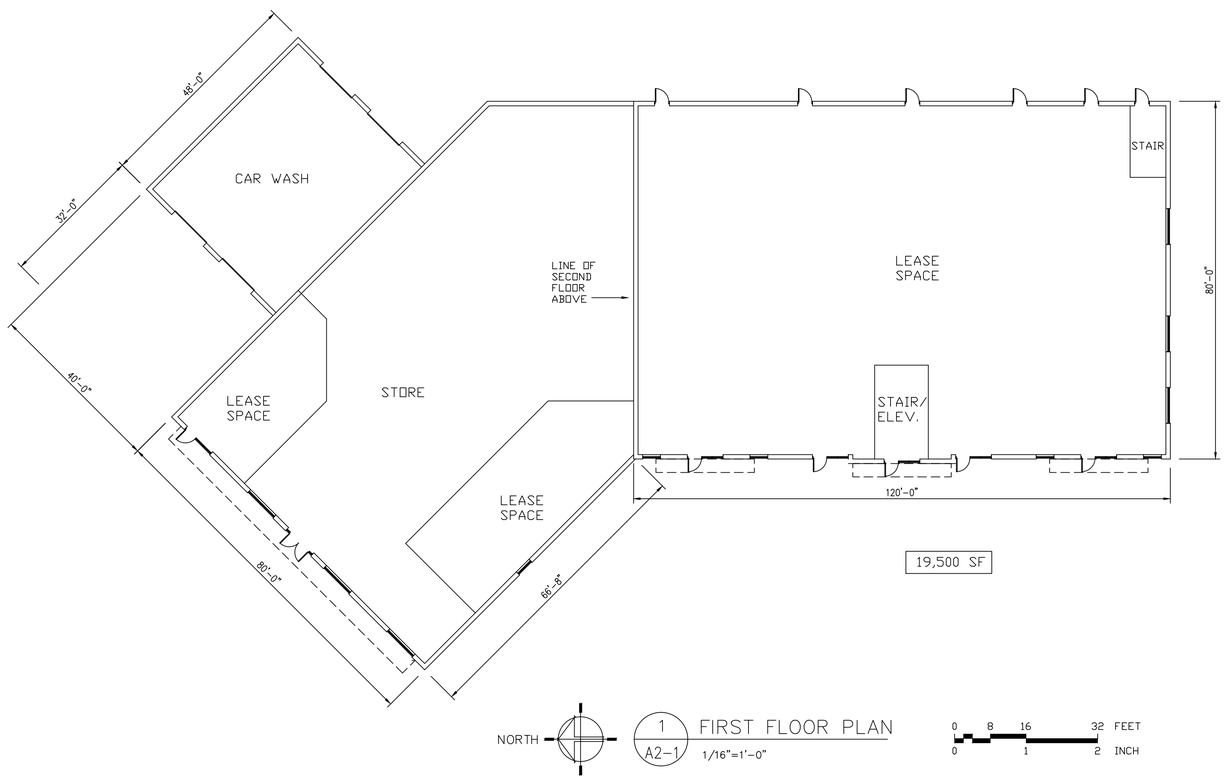

1 A2-1 FIRST FLOOR PLAN
1/16"=1'-0"

0 8 16 32 FEET
0 1 2 INCH

APPRO DEVELOPMENT
design | build | develop

□1□□6 GREN□D□ □□EN□E
L□□E□ILLE□MN □□0□□
□□□9□□□69□1□1
F□□□9□□□69□1□□
EM□IL□
□□□□□ □□□r□d□□□□□□ □□□□□□

□RELIMIN□R□
NOT FOR □ONSTR□□TION

No.	Description	Date

ELKO NEW MARKET PLACE

ELKO NEW MARKET, MN

□□□□□□□
F□□r □□□

□r□□□□□□□ □□r	1□□0□□0160
D□□□	11□□9□1□
Dr□□□ □□	RD□
□□□□□d □□	□□□

□□□1

S□□□

BUILDING IMAGE (VIEW FROM NATCHEZ AVENUE)

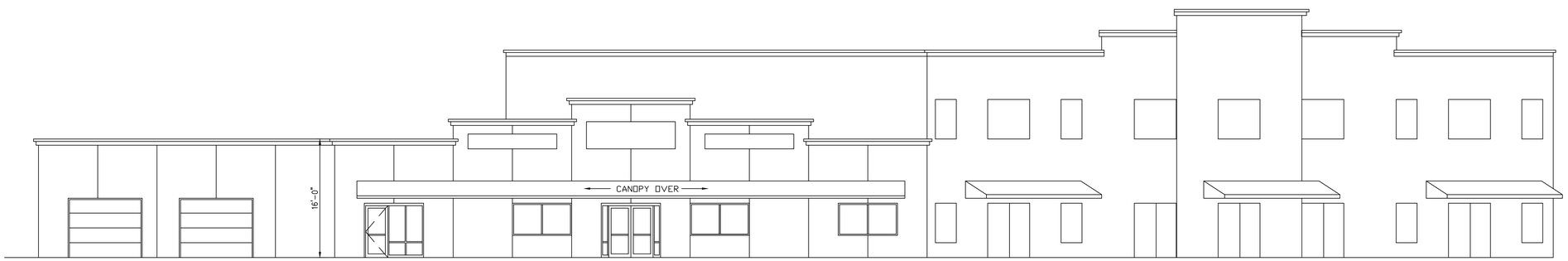

2 A3-1 NORTHWEST ELEVATION
1/8"=1'-0"

0 4 8 16 FEET
0 1 2 INCH

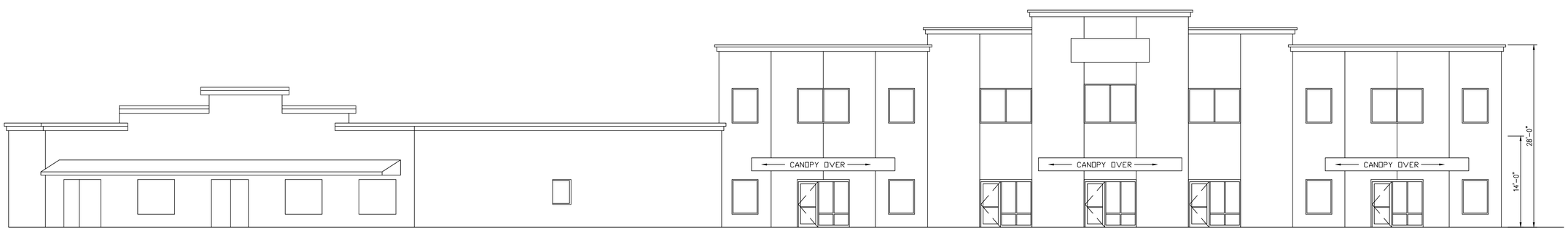

1 A3-1 WEST ELEVATION
1/8"=1'-0"

0 4 8 16 FEET
0 1 2 INCH

APPRO DEVELOPMENT
design | build | develop

□1□□6 GREN□D□ □□EN□E
L□□E□ILLE□MN □□□□
□□□9□□□69□1□1
F□□□9□□□69□1□□
EM□IL□
□□□□□ □□□r□d□□□□□ □□□□□

□RELIMIN□R□
NOT FOR □ONSTR□□TION

No.	Description	Date

ELKO NEW MARKET PLACE

ELKO NEW MARKET, MN

□ □□□□□□
E□□□□□□□□□

□r□□□□□□□ □□r	1□□0□□0160
D□□□	11□□9□1□
Dr□□□ □□	RD□
□□□□□d □□	□□□

□□□1

S□□□

APPRO DEVELOPMENT
design | build | develop

ELKO NEW MARKET PLACE
CONCEPT IMAGE
12/13/17

BOLTON & MENK
Real People. Real Solutions.

12224 Nicollet Avenue
Burnsville, MN 55337-1649

Ph: (952) 890-0509
Fax: (952) 890-8065
Bolton-Menk.com

MEMORANDUM

Date: March 6, 2018

To: Chair Steve Thompson and Members of the Elko New Market Planning Commission

Renee Christianson, Community Development Coordinator

From: Rich Revering, PE – City Engineer

Subject: Review of Plan Set Dated 12 29 17 "Initial Issue"
Elko New Market
Project No.: T15.100785

BACKGROUND

The City Engineer's Office was asked to begin the review the above-referenced plan set on February 15, 2018 and provide comments for the Commission's use at its March 6, 2018 meeting. Our findings and recommendations to the City are limited to sketch-plan level issues and are provided by topic in the following sections:

DISCUSSION

Access

The following comments are based on memo prepared by the City Engineer's office on October 24, 2016 based on consultation with the County Engineer, Assistant County Engineer, and County Traffic Engineer. This memo was furnished to the developer via email to his engineer on November 21st, 2017. The comments below reflect new information based on roundabout layouts updated since the memo's preparation.

- The accesses on CSAH 2 and County Highway 91 will require a permit issued to the City from Scott County. We recommend the developer be required to prepare all drawings and application forms to the County's satisfaction and submit all fees that may be required for the county access permits for these locations as a condition of approval by the City.
- The right-in/right-out access on CSAH will require a right-turn lane be constructed at the applicant's expense. This turn lane can be designed and built to be compatible with the future roundabout, with the final design subject to approval by the City Engineer's Office and the County Highway Engineer. We recommend the applicant be required to modify the plans to include an approvable right-turn lane at this location.
- The right of way to be dedicated to the City for Public Streets and the public street layouts at both access locations provide no turn-around sized to accommodate maintenance and emergency vehicles and no space for snow removed from the street to be placed within the rights of way. We recommend the applicant be required to modify the plans to provide an acceptable turn-around and room for snow storage in a location compatible with typical snow plowing operations at both access locations per the above-referenced City Engineer memo.

Bolton & Menk is an equal opportunity employer.

- All City streets (within dedicated rights of way and connecting to the county roads) are required to include 24-inches of select granular borrow in the subgrade (below any aggregate base). It is recommend the plans be modified to reflect this requirement.
- The right-in/right-out access on County Highway 91 will require a right-turn lane be constructed at the applicant's expense. If constructed prior to the roundabout, this turn lane would not be compatible with the future roundabout. Accordingly, if the project is to be constructed prior to the roundabout we recommend the applicant be required to include escrow for the right turn lane in the amount of $54,000 but not be required to build the turn lane until it can be done compatibly with the roundabout (during or after roundabout construction). The escrow would be returned to the applicant if he satisfactorily constructs the right turn lane when it can be done compatibly with roundabout improvements or used by the City to include the right turn lane with the roundabout project. Any excess would be returned to applicant and he would be billed for any shortfall.
- It is our understanding the applicant is desirous of access to the site from south bound traffic on County Highway 91. Upon roundabout construction, this movement would require approval by the County and a county-approved left turn lane. It is the opinion of the City Engineer's office that this left turn lane would benefit development relying on the access to County Highway 91 depicted on these drawings and would not benefit the City's taxpayers (the turn lane would not be required but for the development). Accordingly, it is recommended the cost for any left turn lane or partial, make-ready, improvement related to it be borne by the applicant.

  It is recommended the Development Agreement for the project state that if the developer desires access to the site for southbound traffic on County Highway 91 he be required to post escrow in the amount of $150,000 for the city to include the left turn lane in the roundabout construction. The city cannot guarantee approval of a left turn movement or turn lane in this location by Scott County. If the inclusion of a turn lane is not included for any reason, the amount escrowed would be returned to the developer less any design and administration fees associated with application to the county for the improvement. Any excess of the escrow after construction would be returned to the applicant. He would be billed for any shortfall.

  OR

  It is recommended the Development Agreement for the project state that if the developer desires the ability to create access to the site for southbound traffic on County Highway 91 in the future (post roundabout) he be required to post escrow in the amount of $36,000 for the city to include only widening of the grading for a future left turn lane in the roundabout construction. No curbs or pavement section components, markings or signage for a left turn lane would be constructed with the roundabout; however, the widening would facilitate later construction of a left turn lane at the applicant or his successor's expense if so desired by the applicant or his successor. The city cannot guarantee approval of a left turn movement or turn lane in this location by Scott County. If the inclusion of widening for a turn lane is not included for any reason, the amount escrowed would be returned to the developer less any design and administration fees associated with application to the county for the improvement. Any excess of the escrow after construction would be returned to the applicant. He would be billed for any shortfall.

<u>Vehicle Maneuvers and Circulation</u>

Examination of the plans and modeling of certain anticipated maneuvers by typical vehicles used to service similar land uses indicates a potential for several maneuver and circulation problems:

- Engineer's office vehicle modeling indicated inadequate radii and/or pavement widths to avoid encroachments into oncoming lanes at site entrances and inadequate radii and/or aisle widths to avoid encroachments into oncoming lanes and parking areas within the site. The model runs also indicate a high likelihood that large trucks entering the site from CSAH 2 will begin the maneuver from the through lane rather than the right turn lane. This may mean the truck needs to wait in the through lane for a gap in the traffic exiting the site because of the encroachments described above. It is recommended the applicant be required to submit a vehicle maneuver and circulation plan for review that indicates the actual vehicle types the site is designed for, the frequency of trips for these vehicles to the site and demonstrates by wheel-path outlines the ability of various vehicles to make the maneuvers required to use and service the site. It is recommended the development agreement address the possibility of actual vehicles differing from any approved plan and what the City response would be to prevent unacceptable impacts on the City streets, county highways, adjacent developments and/or traffic associated with them. The City's review of this plan, when submitted, may result in additional engineering recommendations.
- Wide accesses and generous radii to accommodate trucks can lead to passenger vehicles entering and exiting the site at higher speeds because the resulting "curve" will be gentle for smaller vehicles. Higher speed entering and exiting reduces the attention that can be given to looking for users of the shared use paths planned for the northerly and westerly sides of the site. Flatter approach angles to the county roads for passenger vehicles afforded by the truck-based geometry of the entrances makes it harder to see trail users on the acute side. Staff anticipates that the configuration as proposed would lead to complaints from trail users and requests for measures to attempt to improve safety. No "after-the-fact" effective options to address this problem have been identified that would satisfy all users. It is recommend tactile (rather than visual-only) traffic calming features, particularly a raised pedestrian crossing at each entrance as approved by the City Engineers office, be required to promote reduced enter and exit speeds and make the crossings more prominent.
- Multiple buildings on multiple lots make it possible that the ownership of each lot may not be common. This can lead to disputes about access, drainage, and maintenance. It is recommended the city require that cross access, drainage, and utility easements be provided as necessary on the various parcels to ensure the continued use and enjoyment of a parcel. It is further recommended the Development Agreement address maintenance responsibilities to ensure responsibilities are identified to keep private infrastructure in service for the benefit of other parcels that rely on it and that the responsibilities run with the land.
- Curb is provided in several areas on only one side of the heavy-duty pavement areas apparently intended to define routes for customers, service, maintenance, and emergency vehicles traveling through the site and wishing to avoid driving through parking areas. No pavement markings or other indications of the route are apparent. It is recommended curbs be provided along both sides of this route where compatible with service truck maneuvers, and pavement markings including lane edges and centerline marking be provided over the remainder.
- It is recommended pedestrian links be provided on the northerly and westerly sides of the site to the proposed trail. Trail users will likely create desire lines if a link and opening in any fencing or landscaping is not provided. Not providing the links will force trail users to unduly mix with vehicle traffic in access lanes for extended distances.

<u>Stormwater Management and Wetlands</u>

Date: January 11th, 2018

The applicant is proposing to alter a storm water pond owned by Scott County. This intention is supported by the City Engineer's office; however, written approval will be required from Scott County to alter this facility. The following comments are offered relative to storm water management and wetlands:

- It is recommended the applicant be required to demonstrate to the city the county's approval of the pond use and modification in writing in a form agreeable to the County. Pond sizing was not reviewed as this will need to be approved by Scott County.
- It is recommended the portion of the pond to be created on the parcel, the new pond on the south side of the site, and the wetland and any buffer areas be platted in a separate parcel dedicated to the city rather than in an easement.
- The plans do not include a Stormwater Pollution Prevention Plan meeting the requirements of the MPCA for a General Permit for Construction under the National Pollutant Discharge Elimination System program. This permit and supporting documents will be required. It is recommended they be a condition of approval.
- It is recommended as a condition that the applicant be required to submit a Wetland Replacement Plan application to the City as LGU for the Wetland Conservation Act and demonstrate that approval or a determination of non-jurisdiction from the Army Corps of Engineers has been granted. A portion of the wetlands on the site are also Public Waters wetlands requiring approval or waiver of jurisdiction from the Minnesota Department of Natural Resources.
- Minimum buffer widths in the City's code are not met on the submitted plans. It appears the average buffer width is being met by providing excess buffer width in some areas. It is not recommended additional fill be placed to create minimum buffers; therefore, it is recommended any replacement plan be required to include application for a variance to accept a deviation from the minimum buffer requirements.
- Disturbance will occur within 50 feet of wetlands. It is recommended that redundant sediment controls at the outer edge of buffers be added to the plans to be in place prior to construction and remain in place until the site is stabilized in order to conform to the above-referenced general storm water permit.
- No storm water volume-reduction measures are proposed for the site. Infiltration practices would prohibited by city code and the MPCA general permit due to the fueling station activity. Runoff is proposed to be treated by a wet-sedimentation basin as required for the non-captured runoff volumes. It appears volume reduction requirements for city code and the general permit are met for this site.
- The City's Engineering Manual requires all runoff up to and including that from a 100-year storm be routed via emergency overflow routes to storm water management facilities and not bypass them. It does not appear conveyance systems for storms larger than the proposed pipes can handle are provided to achieve this requirement. No storm sewer pipe sizing computations were provided to demonstrate pipes can convey a 10-year storm to the pond or that inlets can admit the flow rates without bypass to the wetland. It is recommended the applicant be required to amend the plans to convey runoff from storms between the 10 and 100-year return periods to ponds, either by surface or oversized pipes and inlets, and to submit calculations affirming the system can minimally admit and convey the 10-year storm.

<u>Sanitary Sewer and Water Service</u>

The following comments apply to sanitary sewer and water distribution plans for the site:

- The watermain shown through the site is planned to be a 16-inch trunk pipe. The city will pay oversizing (the difference between 16-inch and typical bid prices for 8-inch watermain, valves, and fittings.)
- Staff recommends the City be responsible to maintain potable water mains and hydrants and any sanitary sewer mains due to the potential to affect off-site users and the specialized knowledge and equipment required. It is preferred that the watermain and sanitary sewer mains (any pipe serving more than one building) be in the county highway right of way, if possible. It is recommended the plans be modified to place the mains off site while maintaining the required separation and clearance from features that would impede future open-trench access to the utilities. It appears separate sewer mains can be avoided if individual building sewers are installed to existing mains on the northerly and westerly sides of the site, in cross access utility easements as necessary to allow parcels continued rights if ownerships change. Connect no services to manholes. Connection of services to the existing 12-inch mains with wyes and water-tight saddles would be permitted. If moving utilities off site is not feasible, easements in favor of the city for all water and sewer mains and hydrants, along with access rights to the easements, will be required. The Development Agreement would need to stipulate that the property owner is responsible for restoration costs should any on-site mains or hydrants need to be exposed for maintenance, repair, or replacement. Water extended to the south would need to extend at least 12 feet past any pavement to facilitate future extensions.

Landscaping

The following comments are based on the submitted landscape plan:

- The City Engineer recommends no over-story trees or canopies thereof be permitted within the trench zone of water or sewer mains. This is to avoid the potential for damage to the trees or branches in the future should maintenance, repair, replacement, or modification of the utilities require excavation to expose them.
- The proposed retaining walls will require a design be prepared and submitted by a licensed and qualified engineer that addresses the soil, moisture, height, layout and loading conditions. It is recommended the wall be private and the city not be responsible for its maintenance. The Development Agreement will need to address the maintenance needs of the wall to ensure the adjacent wetland is protected and through-access is maintained.

RECOMMENDATION

A recommended overall condition of approval is that revised site-work plans and required computations be submitted and approved by the City Engineer prior to any further disturbance of the site.

End of Memo

BOLTON & MENK
Real People. Real Solutions.

12224 Nicollet Avenue
Burnsville, MN 55337-1649

Ph: (952) 890-0509
Fax: (952) 890-8065
Bolton-Menk.com

MEMORANDUM

Date: October 24, 2016

To: Thomas Terry, City Administrator

From: Rich Revering PE, City Engineer

Subject: Parcel Access Requirements
Southeasterly Quadrant of CSAHs 2 and 91
Elko New Market, Minnesota
T15.100719

INTRODUCTION

Access issues have been discussed and evolving at the above-referenced site for several years now. The recent award of Federal funding for a roundabout at the intersection in 2020 caused staff to reach out to Scott County to discuss how access would be affected and to agree on requirements that would be relayed to the developer of the site for his planning and design use.

The "Scott County Access Requirements" listed below reflect City Staff members' understanding of the County Highway Department's position; however, the plans still remain subject to County review and County opinions may change with new information or insights.

DISCUSSION

I. Scott County Access Requirements

a. Long-Term (Assumes Roundabout is In Place)

i. Access to CSAH 2

1. *Access will be Right In/Right Out only. The existing median will be kept in place.*
2. *The access will require a right turn lane unless none can safely fit the available space. The length will be determined through a roundabout analysis (preliminary design).*
3. *The access must be in a right of way dedicated to the City of Elko New Market (public). The access permit will be issued only to the City.*
4. *The access must align perpendicularly to CSAH 2 so vehicles waiting to*

Bolton & Menk is an equal opportunity employer.

exit have the best possible sight distance for oncoming traffic and to discourage exiting the site at higher speeds and/or less caution.

ii. Access to CR 91

1. *The default approvable access will be Right In/Right Out. A median constructed with the roundabout will deter left turns. If petitioned for by the City (on behalf of the Developer, for example), a south-bound left turn would be considered; however, a left turn lane or bypass lane would be required, and approval is not promised. Costs to widen CR 91 for a left turn or bypass lane, including rights of way acquisition, would be a local (non-county and non-federal) cost. (City staff recommends this local cost be assigned to adjacent and benefitting development).*
2. *The access would need to be in a City Right of Way and public. The access would need to be accessible to the neighboring parcel to the south via location on a common boundary or by easement. The access must be as far south as possible on the parcel. The access permit will be issued only to the City.*
3. *A standard right-turn lane for NB traffic would be required at local (City staff recommends developer) cost.*
4. *The access must align perpendicularly to CR 91 so vehicles waiting to exit have the best possible sight distance for oncoming traffic and to discourage exiting the site at higher speeds and/or with less caution. (See Street Connection Schematic, attached)*

b. Interim Condition (Roundabout Improvements Is Not Yet In Place)

i. Access to CSAH 2

1. *No right turn lane will be required[1].*
2. *The access must be in a right of way dedicated to the City of Elko New Market (public). The access permit will be issued only to the City.*
3. *The access must align perpendicularly to CSAH 2 so vehicles waiting to exit have the best possible sight distance for oncoming traffic and to discourage exiting the site at higher speeds and/or with less caution. See Street Connection Schematic.*
4. *The access must allow trucks to exit the site with no encroachment on incoming lanes so traffic waiting to enter cannot be backed up onto the highway. See Street Connection Schematic.*
5. *Connections to the City Street (access) must be set back far enough from the highway such that entering vehicles, including trucks, are not forced to stop by conflicting movements and potentially impede highway traffic. See Street Connection Schematic.*

ii. Access to CR 91

1. *Full access during interim between development and roundabout*

construction.

2. *The access would need to be in a City Right of Way and public. The access would need to be accessible to the neighboring parcel to the south via location on a common boundary or by easement. The access must be as far south as possible on the parcel. The access permit will be issued only to the City.*
3. *A standard right-turn lane for NB traffic would be required at local cost.*
4. *A south-bound left-turn lane may not be required:*
    a. County staff not on board yet – will review site traffic study
    b. Security would be required in case problems such as crash-history or chronic complaints develop[2]
    c. The developer could opt to construct a left turn or bypass lane at his cost in lieu of security and potential construction by others. See I.A.2.*a).*
5. *The access must align perpendicularly to CR 91 so vehicles waiting to exit have the best possible sight distance for oncoming traffic and to discourage exiting the site at higher speeds and/or less caution. See Street Connection Schematic*
6. *The access must allow trucks to exit the site with no encroachment on incoming lanes so traffic waiting to enter cannot be backed up onto the highway. See Street Connection Schematic.*
7. *Connections to the City Street (access) must be set back far enough from the highway such that entering vehicles, including trucks, are not forced to stop by conflicting movements and potentially impede highway traffic. See Street Connection Schematic.*

[1]Right of way would need to be dedicated and provisions made such as a Letter of Credit or other security to compel the development to install a right turn lane at its cost when the roundabout is constructed or if, for some reason, the roundabout does not materialize. Premature construction of the lane (pre-roundabout) may result in economic waste if not compatible with roundabout design.

[2]The security would also provide for implementation of a LT lane if the roundabout did not materialize.

II. City Additional Access Requirements

a. Long-Term (Assumes Roundabout is In Place)

i. Access to CSAH 2

1. *Shared-Use-Path crossing of City Streets (access) shall meet ADA requirements, minimize pedestrian exposure to incoming and exiting vehicles, and ensure adequate visibility is maintained between path users and vehicle traffic. Refer to the attached ADA details.*

ii. Access to CR 91

1. *Shared-Use-Path crossing of City Streets (access) shall meet ADA requirements, minimize pedestrian exposure to incoming and exiting vehicles, and ensure adequate visibility is maintained between path users and vehicle traffic. Refer to the attached ADA details.*

iii. Overall Public Access to Site

1. *Option 1 – Public dead end streets into site*

   a. Connections to City street meeting above requirements

   b. No parking on City streets

   c. 11-foot lane widths with 2-ft curb reaction distance (26 feet face to face).

   d. Provisions for snow storage adjacent to roadway and turnaround meeting any applicable environmental requirements.

   e. 10-ton design standards based on MnDOT flexible pavement design method, site soils, and traffic volumes and mix estimated by qualified traffic consultant.

   f. Provisions for maintenance and emergency vehicles to turn around with no encroachment on private property or need to back out onto County highways. Some possible turnaround configurations are attached.

2. *Option 2 - Provide a City Street through the site from the CSAH 2 Access to the CR 91 Access (this option subject to Council acceptance):*

   a. Per requirements in Option 1, less the turnaround provisions.

b. Interim Condition (Roundabout Improvements Is Not Yet In Place)

i. Access to CSAH 2

1. *See long-term*

ii. Access to CR 91

1. *See long-term*
2. *Interim full-access may mean longer waits at certain times of day for cars leaving the site and wanting to turn left to go south bound. This may delay and frustrate drivers behind them that are wanting to turn right. Consider providing sufficient access width to mark a left and right turn at this exit. The left turn can be converted to a pedestrian refuge or a median to further discourage illegal left turns after the roundabout is constructed in the future. This is a suggestive condition for the convenience of customers to the site; it is not a City or County requirement.*

iii. Overall Public Access to Site

1. *See long-term.*

RECOMMENDATIONS

Require the developer of the site to apply these requirements to the layout of the site.

End of Memo

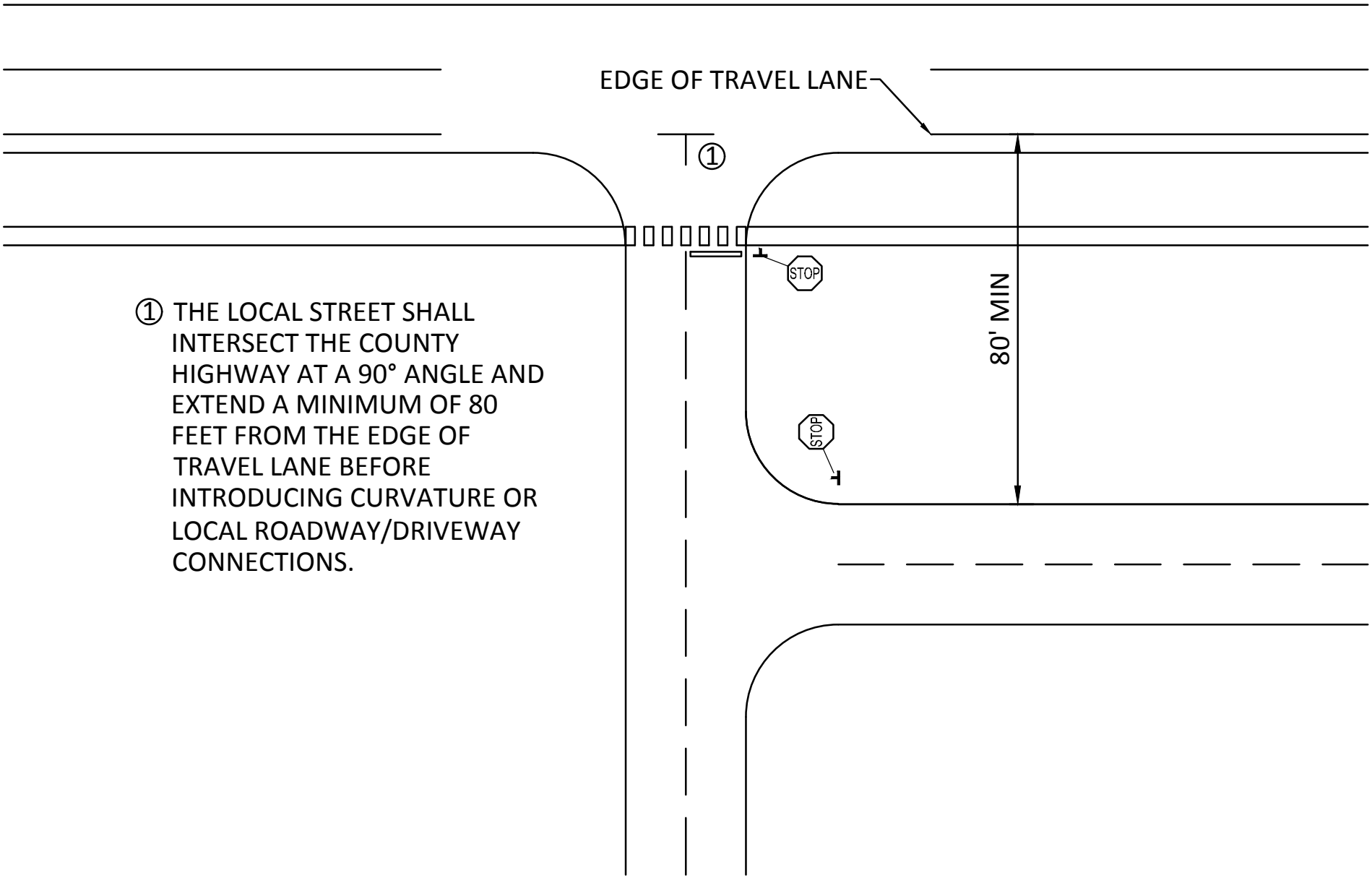

① THE LOCAL STREET SHALL INTERSECT THE COUNTY HIGHWAY AT A 90° ANGLE AND EXTEND A MINIMUM OF 80 FEET FROM THE EDGE OF TRAVEL LANE BEFORE INTRODUCING CURVATURE OR LOCAL ROADWAY/DRIVEWAY CONNECTIONS.

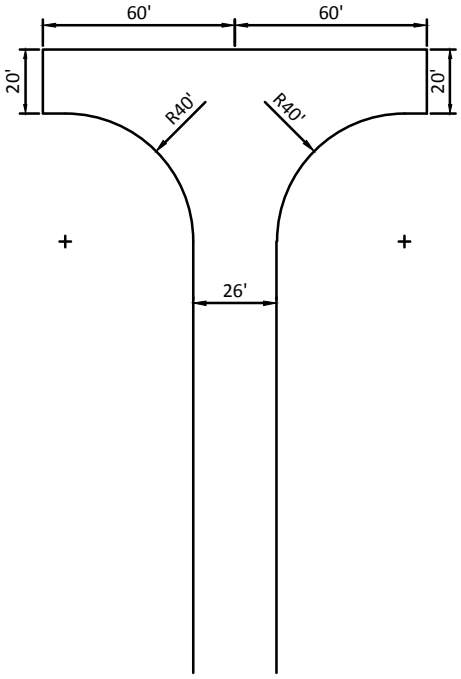

120'
HAMMERHEAD

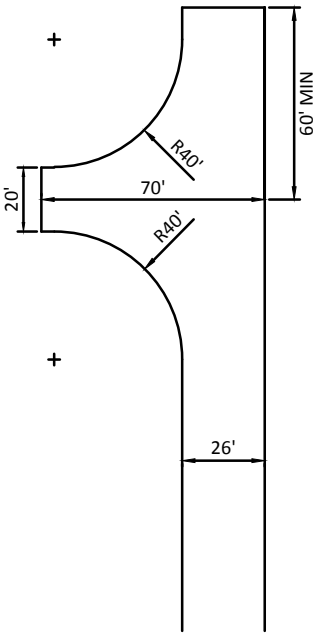

ACCETPABLE
ALTERNATIVE TO
120' HAMMERHEAD

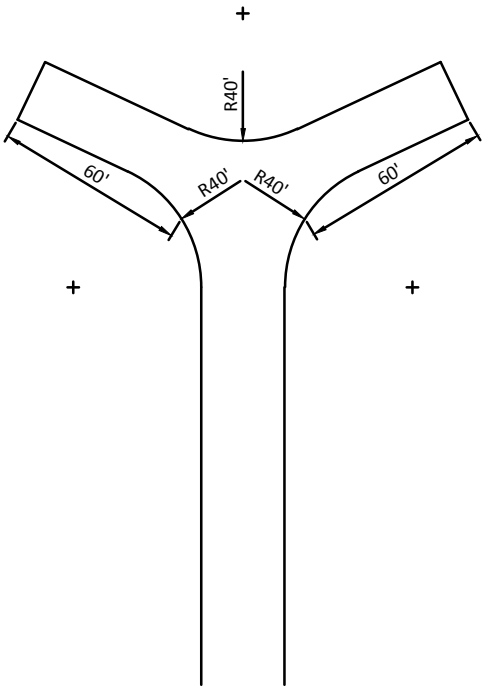

ACCETPABLE
ALTERNATIVE TO
120' HAMMERHEAD

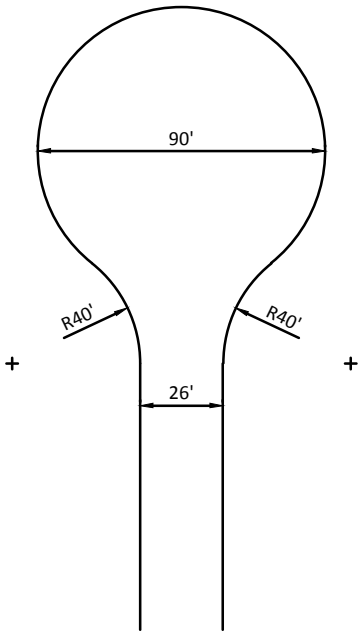

90' DIAMETER
CUL-DE-SAC

601 Main Street
Elko New Market, MN 55054
phone: 952-461-2777 fax: 952-461-2782

MEMORANDUM

TO: WARREN BARSNESS, JOEL COOPER, DALE RUNKLE

FROM: RENEE CHRISTIANSON, COMMUNITY DEVELOPMENT SPECIALIST

SUBJECT: CONCEPT PLAN REVIEW OF WARREN BARSNESS COMMERCIAL DEVELOPMENT, CONSISTING OF THREE FREE STANDING BUILDINGS, ONE OF WHICH INCLUDES A GAS STATION AND CAR WASH

DATE: AUGUST 12, 2016

Background / History

The City has been working with Warren Barsness regarding a possible commercial development located at the southeast quadrant of Co Rd 2 and Co Rd 91. Shown on the current concept plan are three freestanding buildings, one of which contain a gas station and attached car wash facility. Indications from the developer are that retail and office uses are also being proposed.

A hand sketched concept plan was submitted to the City in the fall of 2015. City staff submitted high-level written comments to the developer on September 15, 2015. City staff received a preliminary grading and drainage plan, and a preliminary utility plan from James R. Hill on July 7, 2016. Available for review at the time of the report were the following documents:

- Preliminary grading and drainage plan, submitted July 7, 2016
- Preliminary utility plan, submitted July 7, 2016
- Traffic Impact Study prepared by Spack Consulting, dated November 13, 2015
- Wetland Delineation Report prepared by Michael Whitt, dated April 1, 2016
- Minnesota Routine Assessment Method (wetland) report prepared by Michael Whitt, dated June 8, 2016
- Concept elevation plans, hand-drafted and undated
- Architectural rendition of gas station building, hand-drawn and undated

Legal Description

The proposed development consists of a ten-acre parcel currently described by metes and bounds, as follows:

> The West 660.00 feet of the North 660.00 feet of the Northwest Quarter of Section 27, Township 113, Range 21, Scott County, Minnesota; subject to road easements over the west 33.00 feet and the North 33.0 feet thereof. (Parcel ID 23-927006-2)

The property will need to be platted prior to development.

Neighborhood Conditions
To the north of the property is undeveloped farm land. To the east is a large DNR protected wetland area, and the post office & racetrack beyond the wetland. To the south is undeveloped property. To the west is a vacant lot and single family residential development. The proposed development seems generally compatible with the surrounding land uses.

Comprehensive Land Use Plan
The City's comprehensive land use plan guides the property to a "Town Center" land use designation. The comprehensive plan contains the following language regarding Town Center:

"This classification is a special designation for the recognized traditional Town Centers which have retained attributes of a "downtown" and provide a sense of place based on historic nature and character elements, which include awnings, street lighting, signage, etc. This classification strives to balance the civic center and contemporary commercial features with new cultural focused institutions and enterprises, and redevelopment potential of retail and service uses. The Town Center may be characterized as a service hub with limited retail shopping convenience. Pedestrian circulation within, as well as to the area will be a distinguishing feature. New development can provide for limited residential uses, excluding single family detached dwellings, and can be integrated with the commercial and service environment. Convalescent care facilities and congregate senior citizen housing are appropriate uses at selected locations."

The proposed use of the property meets the intent of the guided land use for the area. Design features of a traditional downtown should be incorporated into the site and building façade. Pedestrian circulation to and within the site will be an important design element.

Zoning
The property is currently zoned B1, Neighborhood Business District. The purpose of the B1 district is to provide for the establishment of local centers for convenient, limited office, retail or service outlets which deal directly with the customer for whom the goods or services are furnished.

Motor fuel stations, commercial car washes, and offices are allowed with an approved conditional use permit. Numerous retail uses are allowed as permitted uses within the district, as well as restaurants within a building having another principal use.

Development of the property with the currently proposed uses requires an approved conditional use permit, or approval of a planned unit development.

Lot Size
The gross area of the property is 10 acres. The net area of the property as indicated on Scott County's GIS is 8.62 acres. The minimum lot size in the B1 district is 20,000 square feet.

Information regarding proposed lot sizes has not been submitted; therefore, planned lot sizes cannot be evaluated.

Setbacks
The required structure setbacks in the B1 zoning district are 65' from minor arterial roadways (both Co Rd 2 & Co Rd 91), 20' from a side property line and 30' from a rear property line.

The buildings appear to meet the required setbacks, except the easterly building, which appears to be proposed at approximately 55' from the Co Rd 2 right of way which is closer than the required 65'.

The motor fuel station canopy is proposed at 35' from the right-of-way, which meets the required 30' setback.

Height Requirements

Structures shall not exceed 35' in height in the B1 zoning district. The fuel island canopy shall not exceed 18' in height, and shall be a minimum of 14' in height. The proposed building height and canopy height have not been submitted.

Design Requirements – Chapter 5 & 26

Title 11-5-1-A-4(b) identifies allowable exterior building materials for commercial zoning districts. Acceptable materials include brick, concrete composite board, stone, precast concrete panels, rock face concrete block, wood, glass curtain wall panels, stucco or EIFS, steel, aluminum or fiber cement siding.

In addition to the above requirements, Title 11-26A-4 of the city code contains architectural requirements specific to motor fuel stations, as follows:

1. As a part of the conditional use permit application, a color illustration of all building elevations shall be submitted.
2. The architectural appearance, scale, and functional plan of the building(s) and canopy shall be complementary and compatible with each other and the existing buildings in the neighborhood setting.
3. Exterior wall treatments such as brick, stone (natural or artificial), decorative concrete block and stucco shall be used.

The proposed building materials for the buildings have not been submitted. Based on the architectural renditions it appears the gas station building may be proposed using concrete tilt up panels.

Canopy & Pump Island Design

Below are design requirements for pump-islands and canopies in the B1 zoning district:

1. The edge of the canopy shall be thirty feet (30') or more from the front and/or side lot line; provided, that adequate visibility both on site and off site is maintained.
2. The canopy shall not exceed eighteen feet (18') in height and shall provide fourteen feet (14') of clearance to accommodate a semitrailer truck passing underneath.
3. The canopy fascia shall not exceed three feet (3') in vertical height.
4. The architectural design, colors, and character of the canopy shall be consistent with the principal building on the site.
5. Signage may be allowed on a detached canopy in lieu of wall signage on the principal structure; provided, that the individual canopy sign does not exceed more than twenty percent (20%) of the canopy facade facing a public right of way.
6. Canopy posts/signposts shall not obstruct traffic or the safe operation of the gas pumps.
7. Pump islands shall comply with the following performance standards:
    a. Pump islands shall be elevated six inches (6") above the traveled surface of the site.
    b. All pump islands shall be set at least thirty feet (30') back from any property line. Additionally, the setback between the pump islands' curb face shall be at least twenty four feet (24').

Drive-Thru
No drive-thru facilities are shown on the current site plan. Should a drive-thru be proposed incorporated into future site plans, not less than 120' of stacking space shall be provided for single service lanes. Drive-thru windows are also to be screened from view of public rights-of-way and residential districts. Drive-thru regulations associated with car washes have separate regulations.

Parking – Chapter 9
Parking requirements can be found in Title 11-9 of the city code. Parking areas must have a concrete curb barrier and be setback 5' from the property line (and entirely outside of easement areas). Parking stalls must be striped with white or yellow paint not less than 4' wide. Parking areas shall be surfaced with concrete, bituminous or pavers. Parking stalls shall be a minimum of 9' x 18' and drive aisles shall be a minimum of 24' in width. It appears that the dimensions of the parking lot drive aisles and parking stalls comply with city code.

The number of parking spaces required is based on the proposed use of the buildings. Below are sample parking requirements for uses shown on the concept plan or that may be likely to locate on the site. Parking requirements are as follows:

Commercial:

- Office – 1 space per 400 square feet of floor area
- Car wash (accessory to motor fuel station) – 4 off-street stacking spaces per drive-through car wash. The bay inside the car wash shall not be considered a stacking space.
- Convenience grocery – 1 space per 100 square feet of floor area. Parking areas at pump islands may be counted as parking spaces.
- Fitness center – 1 space per exercise station, plus 1 space per employee on the largest work shift.
- Motor fuel station – 1 per pump, plus 1 per employee on the largest shift. With convenience grocery, include 1 per 100 square feet of floor area. Parking areas at pump islands may be counted as parking spaces.
- Restaurant, fast food – 1 per 50 square feet of floor area, plus 1 per employee on largest shift.
- Restaurant, sit down – 5 per 1,000 square feet of floor area
- Retail & multiple occupancy retail service buildings– 1 per 250 square feet of floor area

Staff is not able to verify the parking requirements are being met; building square footages and proposed uses are needed in order to verify. It is the developer's responsibility to demonstrate compliance with the city's parking requirements by providing detailed information for each proposed building and use. Although the dimensions of the parking lot drive aisles and parking spaces appear to comply with city code, staff notes that the parking areas in general are shown too close to the right-of-way lines. The curbing is currently shown within areas where drainage and utility easements will be required, and where landscaping is required.

Landscaping – Chapter 10
A landscaping plan and planting schedule meeting the requirements of Title 11-10 and Title 11-26A-4 must be submitted for review and approval. Landscaping is not permitted within public rights-of-ways, and is highly discouraged within public drainage and utility easement as these areas are to be reserved for utilities.

Title 11-10-4 of the city code contains the following regulations specific to the B1 zoning district:

1. At least twenty five percent (25%) of the land area shall be sodded and landscaped with approved ground cover, shrubbery and trees.

2. A minimum landscaped buffer area thirty feet (30') in width shall separate any parking, driveway, or structure from a lot line common with any residential district.
3. All properties abutting residential districts shall provide in-ground irrigation systems to all landscaped areas.
4. All areas disturbed by grading which are not built upon, paved or retained as a natural area shall be sodded and/or landscaped unless specifically approved as part of the overall landscape plan.
5. All new plants shall be guaranteed for twelve (12) months from the time planting has been completed. All plants shall be alive, of good quality, and disease-free at the end of the warranty period or be replaced. Any replacements shall be warranted for twelve (12) months from the time of planting.

In addition to the above requirements, Title 11-26A-4 of the city code contains landscaping requirements specific to motor fuel stations in the B1 zoning district, as follows:

1. Minimum required green area shall be in accordance with the provisions of chapter 10 of this title (above).
2. At the boundaries of the lot, the following landscape area shall be required:
    a. From side and rear property lines, an area of not less than ten feet (10') wide shall be landscaped in compliance with chapter 10 of this title.
    b. From all road rights of way, an area of not less than fifteen feet (15') wide shall be landscaped in compliance with chapter 10 of this title.
    c. Where lots abut residentially zoned property, a buffer yard of not less than twenty feet (20') wide shall be landscaped and screened in accordance with section 11-5-4 and chapter 10 of this title.
    d. The property owner shall be responsible for maintenance of all landscaping, including within the boulevard.

Additional information regarding landscaping requirements can be found in Title 11-10 of the city code.

Lighting – Chapter 4 & 26

A lighting plan must be submitted which complies with Title 11-4-7 of the city code. Exterior lighting shall not exceed .5 foot-candles at the property line when adjoining residential properties, and 1 foot-candle at the property line when adjoining a similar zone and land use.

In addition to the above requirements, Title 11-26A-4 of the city code contains lighting requirements specific to motor fuel stations in the B1 zoning district, as follows:

Exterior Lighting: The lighting shall be accomplished in such a way as to have no direct source of light visible from adjacent land in residential use or from the public right of way and shall be in compliance with section 11-4-7 of this title. A comprehensive lighting plan shall be submitted as part of the conditional use permit application, and shall be subject to the following performance standards:

1. Canopy Lighting: Canopy lighting under the canopy structure shall consist of canister spotlights recessed into the canopy. No portion of the light source or fixture may extend below the ceiling of the canopy. Total canopy illumination below the canopy shall not exceed one hundred fifteen (115) foot-candles at ground level.
2. Illumination: Maximum site illumination shall not exceed limits set forth in section 11-4-7 of this title. (above)

Signage – Chapter 12
A comprehensive plan for signage must be submitted for review and approval. Staff understands that it is not possible to submit detailed sign information at this time, however, the general location, size and type of proposed signs should be included in the application. Additional information regarding the sign regulations can be found in Title 11-12 of the city code. Consistent with the objections of the "Town Center" land use designation, signage that would be compatible with a historic downtown is encouraged.

Easements
The City's Subdivision Ordinance (Chapter 9-6 (A)) requires that drainage and utility easements shall be provided on all lot lines. At a minimum, these easements shall be 10' wide along all lot lines along streets and along all boundaries with land not being developed.

10' wide drainage and utility easements shall be shown along all property lines. It should be noted that the perimeter curb line, as shown on the current concept plan, is located only 5' from the property line. The curbing will not be allowed within the drainage and utility easements.

Access / Roads / Transportation Issues
The development borders two existing roads, both of which are Scott County jurisdictional roadways. Roads, functional classification of the roads, and comments are as follows:

County Road 2 / Main Street, A Minor Arterial Roadway. – The purpose of a minor arterial roadway is to link urban areas to principal arterials (such as I35) and larger towns. The emphasis of these roadways is mobility as opposed to access. Traffic volumes on this section of Co Rd 2 are approximately 9,200 vehicles per day; and are expected to grow to nearly 22,000 vehicles per day upon full build-out of the area identified in the City's Comprehensive Plan. The speed limit is 55 mph. The roadway is under the jurisdiction of Scott County. Preliminary comments were provided by Scott County in the summer of 2015, and Scott County comments on the current concept plan are contained in the attached memo dated August 8, 2016. Comments relating to Co Rd 2 are as follows:

- The County will permit a right-in/right-out on Co Rd 2. The access on Co Rd 2 requires a right turn lane.
- The concept shows a ¾ access on Co Rd 2. The ¾ access would not be permitted. The left turn movement from Co Rd 2 shall be conducted at the Co Rd 2 and Co Rd 91 intersection.
- Any access shall be required to be a public street. The public street does not appear to be identified on these plans.
- The minimum right-of-way for minor arterial roadways is 75' from centerline. Additional right-of-way along Co Rd 2 may be needed to provide for the required turnlane and taper. Detailed cross sections in this are showing the turn lane, trail, boulevard, etc. are required.
- Any work within the County right-of-way requires a County permit.

The current concept plan proposes an eastbound right-in, right-out access on Co Rd 2, as well as a westbound left ¾ access into the site. Scott County will allow the right-in, right-out access on Co Rd 2, but will not allow the ¾ access. Future plan submittals must show the eastbound right turn lane into the site from Co Rd 2, access via a public street connection (public right –of-way), and removal of the ¾ access, as required by Scott County.

County Road 91 / Natchez Avenue, B Minor Arterial Roadway. The purpose of a minor arterial roadway is to link urban areas to principal arterials (such as I35) and larger towns. The emphasis of these roadways is mobility as opposed to access. Traffic volumes on this section of Co Rd 91 are approximately 4,050

vehicles per day; and are expected to grow to nearly 11,000 vehicles per day upon full build-out of the area identified in the City's Comprehensive Plan. The speed limit is 55 mph. The roadway is under the jurisdiction of Scott County. Preliminary comments were provided by Scott County in the summer of 2015, and Scott County comments on the current concept plan are contained in the attached memo dated August 8, 2016. Comments relating to Co Rd 91 are as follows:

- The access on Co Rd 91 would require both a right turn land and left turn lane.
- Access shall be required to be a public street. The public street does not appear to be identified on these plans.
- The minimum right-of-way for minor arterial roadway is 75' from centerline. Detailed cross sections showing the turn lane, trail, boulevard, etc. are required.

The current concept plan proposes a full movement intersection on Co Rd 91 at the south end of the property. Scott County will allow the full movement intersection and requires both right and left turn lanes into the site. Future plan submittals must show turn lanes into the site, and access via a public street connection (public right-of-way), as required by Scott county.

Trails

The City's 2030 Park & Trail Plan identifies a proposed sidewalk / trail corridor along the south side of Co Rd 2 and the east side of Co Rd 91. The City's Transportation Plan also recommends that sidewalks or trails be constructed adjacent to all minor collectors, major collectors, and minor arterial roadways. Consistent with both of these adopted plans, city staff recommends that a trail be constructed along the south side of Co Rd 2 and the east side of Co Rd 91 concurrent with the development. The trail can be constructed within the county road right of way.

Wetlands

A wetland delineation report prepared Whitt Environmental Services has been submitted. The report indicates a large wetland on the subject property. The delineated boundary corresponds approximately with the 1130 contour line. The delineated wetland boundary connects to a DNR protected water with an ordinary high water mark of 1126.4. The wetland delineator has opined that the City of Elko New Market, Minnesota Board of Water and Soil Resources, Minnesota Department of Natural Resources, and the U.S. Army Corp of Engineers all have jurisdiction over the wetlands on or adjacent to the site.

The concept plans submitted shows a large area of wetland proposed to be filled. The City has not currently received any formal applications to fill/mitigate the wetlands on the site. In that process, it is required that the applicants first avoid, then minimize, and finally mitigate any wetland impacts on the site. City staff is concerned about the required sequencing process, especially as it pertains to filling needed to accommodate the southerly building on the site.

The current site plan, which shows substantial filling of wetlands on the site, cannot be approved until an application for wetland mitigation has been submitted, and the wetland sequencing process has been completed and approved by the Elko New Market City Council. The developer shall prepare an application for wetland mitigation that describes shows how the sequencing is being met.

Wetland Buffer Requirements

Title 11-11-4 (C) of the city code requires vegetative buffers be maintained adjacent to delineated wetlands. The buffer width is dependent upon the functional assessment (quality) of the wetland. A MnRAM report prepared by Whitt Environmental Services has been submitted. The results of the report indicate that the wetland must have a wetland buffer with an average width of 30' and a minimum width of 25'.

The city code also states the following:

"The first 25' of buffer, as measured from the wetland, cannot be disturbed during project construction (i.e. cleared or graded, except for temporary disturbances for public roads and utility construction) and shall be protected from disturbance with temporary fencing prior to construction. Vegetation can be replaced and site soils preparation work completed within the first 25' if necessary to establish acceptable buffer vegetation in accordance with these wetland regulations."

The current concept plan does show grading within the buffer area. Because the city has not received or approved any formal applications showing the extent of proposed wetland filling, it is difficult to evaluate buffer widths and building setbacks to the wetlands. The northeasterly building is shown less than 15' from the wetland boundary, which is closer than the required 25' to 30' buffer.

City Engineer Comments

The city engineer submitted preliminary comments on the current concept plan in an email dated July 11, 2016 (attached). Comments are categorized by transportation, stormwater, sanitary sewer, and water. The city engineer notes that additional information is needed.

Stormwater

The current concept plan shows that the developer intends to route the stormwater runoff from the entire site into a pond on the adjacent property (to the east) owned by Tom Ryan, into a pond constructed by Scott County, and maintained by the City. The city engineer is currently working with Scott County engineer's regarding the feasibility of this concept. Preliminary comments from Scott County regarding this concept are contained in an August 8, 2016 memo. County comments relating to stormwater and use of their pond are as follows:

- The concept proposes to use the County pond to discharge its stormwater to. The County pond was developed under old stormwater requirements. If drainage is directed to the County pond, the existing pond would first need to be brought into compliance with current stormwater standards. If the development desires a regional stormwater ponding approach, the County would need to be provided detailed stormwater information to understand the development's ability to utilize/expand the existing stormwater pond. Any stormwater plans and construction would be the development's responsibility.
- Infiltration is needed on the site that conforms with MPCA NPDES permit requirements.

Additional (preliminary) comments by the city engineer are shown in the attached email dated July 11, 2016. The City and/or County have received no information from the developer to date to address the design of the stormwater pond, stormwater calculation, or compliance with MPCA NPDES standards or City standards. If it is determined that there is available space to expand the existing pond, the City would support and encourage this. If it is determined that there is no remaining capacity in the existing pond, and that the drainage cannot be accounted for within the County easement on the adjacent property, the developer may need to account for stormwater management on site.

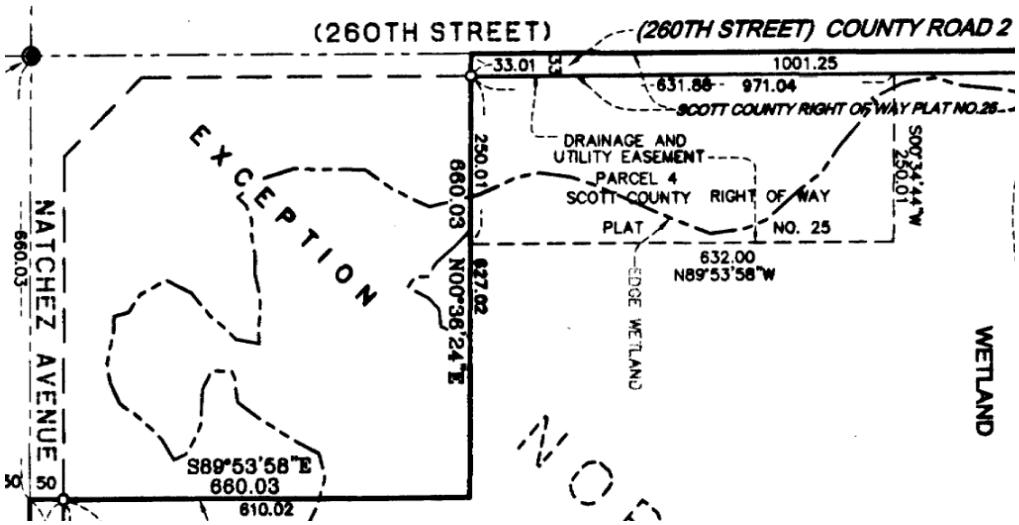

Drainage easement for existing pond located east of developer's property

Aerial view of stormwater pond located east of developer's property

View of existing stormwater pond located east of developer's property

Sanitary Sewer
Sanitary sewer is available along both Co Rd 91 and Co Rd 2. A 6" pvc sanitary sewer connection is proposed off of a trunk line located in the Co Rd 2 (southerly) right of way. Additional information is needed about how the future buildings are to be served. Additional (preliminary) comments by the city engineer are shown in the attached email dated July 11, 2016.

Water
Water is available along Co Rd 2. A 6" ductile iron water connection is proposed off of a trunk line located in the Co Rd 2 (southerly) right of way. Additional information is needed about how the future buildings are to be served, as well as how water will be extended to the property to the south. Additional (preliminary) comments by the city engineer are shown in the attached email dated July 11, 2016.

Public Works Director Comments
The public works director has recommended the inclusion of hammerhead cul-de-sacs at the entrance to the development where public right-of-way is being required by Scott County, off of both the Co Rd 91 and Co Rd 2 access points.

Fire Chief Comments
The fire chief has not reviewed the concept plan.

Police Chief Comments
The police chief has reviewed the concept plan and would like to review the final proposed traffic flows through the site for both phase I and future phases, and he also recommends that the internal street network within the development remain private owned.

Building Official Comments
The building official has not reviewed the concept plan.

Parks Commission Comments
Title 12-9-8 of the city code requires that 10% of the gross area being subdivided be dedicated for public parks, trails, or open space. If no land dedication is required, the park fee is $2,800 per acre for commercial development. The Parks Commission will make a recommendation as to whether land or cash in lieu of land should be required for the proposed development.

The item is being scheduled for the September 1, 2016 Parks Commission meeting for discussion and recommendation. If the Parks Commission requests cash in lieu of land, staff will recommend that the remaining wetland area be discounted from the required per-acre fee. Official acreage calculations will need to be submitted by the developer's engineer/surveyor.

The City's adopted Park & Trail Plan identifies future trails along the east side of Co Rd 91 and the south side of Co Rd 2. A sidewalk or trail shall be constructed along the south side of Co Rd 2, and along the east side of Co. Rd. 91 at the time of development, consistent with the City's adopted trail plan. Along Co Rd 91 to the south, there is an existing 10' wide trail, and along the south side of Co Rd 2 to the west there is a 5' wide sidewalk.

Scott County Highway Department Comments
Official (preliminary) Scott County comments are contained in the attached memo from Craig Jenson dated August 8, 2012.

Staff Recommendation:

Staff supports the proposed use of the property for the proposed motor fuel station, car wash, convenience store and miscellaneous commercial uses. As noted in this memo there are a variety of design items that need to be addressed, and formal applications that need to be made to the city prior to development approval. The primary areas of concern are the approval for wetland mitigation, site access, and stormwater management. In addition to comments submitted by the city engineer and Scott County, the following are items to be noted or that need further attention:

1. An approved conditional use permit is required for motor fuel stations, commercial car washes, and offices, or, approval of a planned unit development is required.
2. The property is currently described by metes and bounds and needs to be platted prior to issuance of a building permit on the property.
3. The northeasterly building does not meet the Co Rd 2 setback requirement of 65'.
4. Building elevations showing exterior building design and materials must be submitted at the time of [CUP or PUD] application.
5. Details regarding the proposed pump island design and canopy design must be submitted at the time of [CUP or PUD] application.
6. The perimeter curbing as shown on the concept plan is shown too close to the right-of-way. Perimeter curbing, drive aisles, and parking stalls are not permitted within the drainage and utility easements.
7. The applicant shall demonstrate compliance with the city's parking requirements by providing detailed information for each proposed building and use.
8. A landscaping plan meeting the requirements of Title 11-10 and Title 11-26A-4 of the city code must be submitted for review and approval. From all road rights-of-ways, an area of not less than 15' wide shall be landscaped.
9. A lighting plan meeting the requirements of Title 11-4-7 of the city code must be submitted for review and approval.
10. A signage plan shall be submitted for review and approval at the time of [CUP or PUD] application.
11. 10' wide drainage and utility easements are required along all lot lines, as required by the City's Subdivision Ordinance. Drainage and utility easement shall be shown on future plan submittals.
12. Access into the site, including turn lane requirements, is subject to the requirements and approval of Scott County. Preliminary Scott County comments are contained in an August 8, 2016 memo.
13. Future plan submittals must show the eastbound right turn lane into the site from Co Rd 2, access via a public street connection (public right –of-way), and removal of the ¾ access, as required by Scott County.
14. Future plan submittals must show the right and left turn lanes into the site from Co Rd 91, and access via a public street connection (public right-of-way), as required by Scott County.
15. A 10' wide bituminous trail along the east side of Co Rd 91 shall be incorporated into the development plans. The trail can be located within the county road right-of-way.
16. A 10' wide bituminous trail (or 5' wide sidewalk) along the south side of Co Rd 2 shall be incorporated into the development plans. The trail/sidewalk can be located within the county road right-of-way.
17. Filling of wetlands as depicted on the current concept plan requires compliance with Wetland Conservation Act and sequencing requirements. An application for wetland mitigation must be approved by the Elko New Market City Council.
18. An average wetland buffer width of 30' shall be shown along all delineated wetlands.
19. The development shall comply with the recommendations of the city engineer. Preliminary engineering comments are shown in a July 11, 2016 email.
20. The current plan for stormwater management and connection to the adjacent stormwater pond is subject to the approval of Scott County and the city engineer. The applicant shall demonstrate

compliance with the city's stormwater volume and rate requirements, city and NPDES requirements.

Attachments:
Street views of property
Ordinance requirements for commercial car washes
Ordinance requirements for motor fuel stations
Preliminary grading plan
Preliminary utility plan
Architectural renderings
Aerial site map
City engineer email dated July 11, 2016
Scott County comments dated August 8, 2016

View from northwest corner of property, looking southeast

View from southwest corner of property, looking northeast

View from northeast corner of property, looking southwest

Commercial car washes (drive-through and self-service); provided, that:

A. The architectural appearance and functional plan of the building and site shall not be so dissimilar to the existing buildings or areas as to cause impairment in property values or constitute a blighting influence.

B. Magazining or stacking space is constructed to accommodate that number of vehicles which can be washed during a maximum thirty (30) minute period and shall be subject to the approval of the city engineer.

C. At the boundaries of a residential district, a strip of not less than five feet (5') shall be landscaped and screened in compliance with section 11-5-4 andchapter 10 of this title.

D. Parking or car magazine storage space shall be screened from view of abutting residential districts in compliance with section 11-5-4 of this title.

E. The entire area, other than occupied by the building or plantings, shall be surfaced with material which will control dust and drainage, which is subject to the approval of the city engineer.

F. The entire area shall have a drainage system which is subject to the approval of the city.

G. All lighting shall be hooded and so directed that the light source is not visible from the public right of way or from an abutting residence and shall be in compliance with section 11-4-7 of this title.

H. Vehicular access points shall be limited, shall create a minimum of conflict with through traffic movement and shall be subject to the approval of the city engineer.

I. Provisions are made to control and reduce noise.

Motor fuel stations; provided, that:

A. Motor Fuel Facilities: Motor fuel facilities shall be installed in accordance with state and city standards. Additionally, adequate space shall be provided to access fuel pumps and allow maneuverability around the pumps. Underground fuel storage tanks are to be positioned to allow adequate access by motor fuel transports and unloading operations which do not conflict with circulation, access and other activities on the site. Fuel pumps shall be installed on pump islands.

B. Architectural Standards:

1. As a part of the conditional use permit application, a color illustration of all building elevations shall be submitted.

2. The architectural appearance, scale, and functional plan of the building(s) and canopy shall be complementary and compatible with each other and the existing buildings in the neighborhood setting.

3. Exterior wall treatments such as brick, stone (natural or artificial), decorative concrete block and stucco shall be used.

C. Canopy: A protective canopy structure may be located over the pump island(s) as an accessory structure. The canopy shall meet the following performance standards:

1. The edge of the canopy shall be thirty feet (30') or more from the front and/or side lot line; provided, that adequate visibility both on site and off site is maintained.

2. The canopy shall not exceed eighteen feet (18') in height and shall provide fourteen feet (14') of clearance to accommodate a semitrailer truck passing underneath.

3. The canopy fascia shall not exceed three feet (3') in vertical height.

4. The architectural design, colors, and character of the canopy shall be consistent with the principal building on the site.

5. Signage may be allowed on a detached canopy in lieu of wall signage on the principal structure; provided, that the individual canopy sign does not exceed more than twenty percent (20%) of the canopy facade facing a public right of way.

6. Canopy posts/signposts shall not obstruct traffic or the safe operation of the gas pumps.

D. Pump Islands: Pump islands shall comply with the following performance standards:

1. Pump islands shall be elevated six inches (6") above the traveled surface of the site.

2. All pump islands shall be set at least thirty feet (30') back from any property line. Additionally, the setback between the pump islands' curb face shall be at least twenty four feet (24').

E. Dust Control And Drainage: The entire site, other than taken up by a building, structure, or plantings, shall be surfaced with asphalt, concrete, cobblestone, or paving brick. Plans for surfacing and drainage shall be subject to approval of the city engineer. Drainage from all fueling areas shall be directed to an oil/grit separator. Minimum design standards for the oil/grit separator shall include the following:

1. A minimum of four hundred (400) cubic feet of permanent pool storage capacity per acre of drainage area.

2. A minimum pool depth of four feet (4').

3. A minimum oil containment capacity of eight hundred (800) gallons.

4. Minimum maintenance inspection of two (2) times per year and/or after measurable spill events. A measurable spill shall be defined by the Minnesota pollution control agency (MPCA). Any measurable spill event shall be reported to the MPCA.

F. Landscaping:

1. Minimum required green area shall be in accordance with the provisions of chapter 10 of this title.

2. At the boundaries of the lot, the following landscape area shall be required:

a. From side and rear property lines, an area of not less than ten feet (10') wide shall be landscaped in compliance with chapter 10 of this title.

b. From all road rights of way, an area of not less than fifteen feet (15') wide shall be landscaped in compliance with chapter 10 of this title.

c. Where lots abut residentially zoned property, a buffer yard of not less than twenty feet (20') wide shall be landscaped and screened in accordance with section 11-5-4 and chapter 10 of this title.

d. The property owner shall be responsible for maintenance of all landscaping, including within the boulevard.

G. Exterior Lighting: The lighting shall be accomplished in such a way as to have no direct source of light visible from adjacent land in residential use or from the public right of way and shall be in compliance with section 11-4-7 of this title. A comprehensive lighting plan shall be submitted as part of the conditional use permit application, and shall be subject to the following performance standards:

1. Canopy Lighting: Canopy lighting under the canopy structure shall consist of canister spotlights recessed into the canopy. No portion of the light source or fixture may extend below the ceiling of the canopy. Total canopy illumination below the canopy shall not exceed one hundred fifteen (115) foot-candles at ground level.

2. Illumination: Maximum site illumination shall not exceed limits set forth in section 11-4-7 of this title.

3. Access: Vehicular access points shall create a minimum of conflict with through traffic movement and shall comply with chapter 9 of this title.

H. Circulation And Loading: The site design shall accommodate adequate turning radius and vertical clearance for a semitrailer truck. Designated loading areas shall be exclusive of off street parking stalls and drive aisles. A site plan shall be provided to illustrate adequate turning radius, using appropriate engineering templates.

I. Parking:

1. Parking spaces shall be calculated solely based upon the use(s) and the square footage of the principal building(s).

2. Parking spaces shall be screened from abutting residential properties in accordance with section 11-5-4 of this title.

J. Noise: Public address system shall not be audible at any property line. Playing of music or advertisement from the public address system is prohibited. Noise control shall be required as regulated by section 11-4-8 of this title.

K. Outside Storage, Sales And Service: No outside storage or sales shall be allowed, except as follows:

1. Public phones may be located on site as long as they do not interrupt on site traffic circulation and are not located in a yard abutting residentially zoned property.

2. Propane sales of twenty (20) pound capacity tanks may be located outside, provided the propane tanks are secured in a locker and meet all state and city building and fire codes.

3. A compressed air service area may be located on site as long as it does not interrupt on site traffic circulation.

L. Litter Control: The operation shall be responsible for litter control on the subject property, which is to occur on a daily basis. Trash receptacles shall be provided at convenient locations on site to facilitate litter control.

M. Additional Stipulations: All conditions pertaining to a specific site are subject to change when the city council, upon investigation in relation to a formal request, finds that the general welfare and public betterment can be served as well or better by modifying or expanding the conditions set forth herein.

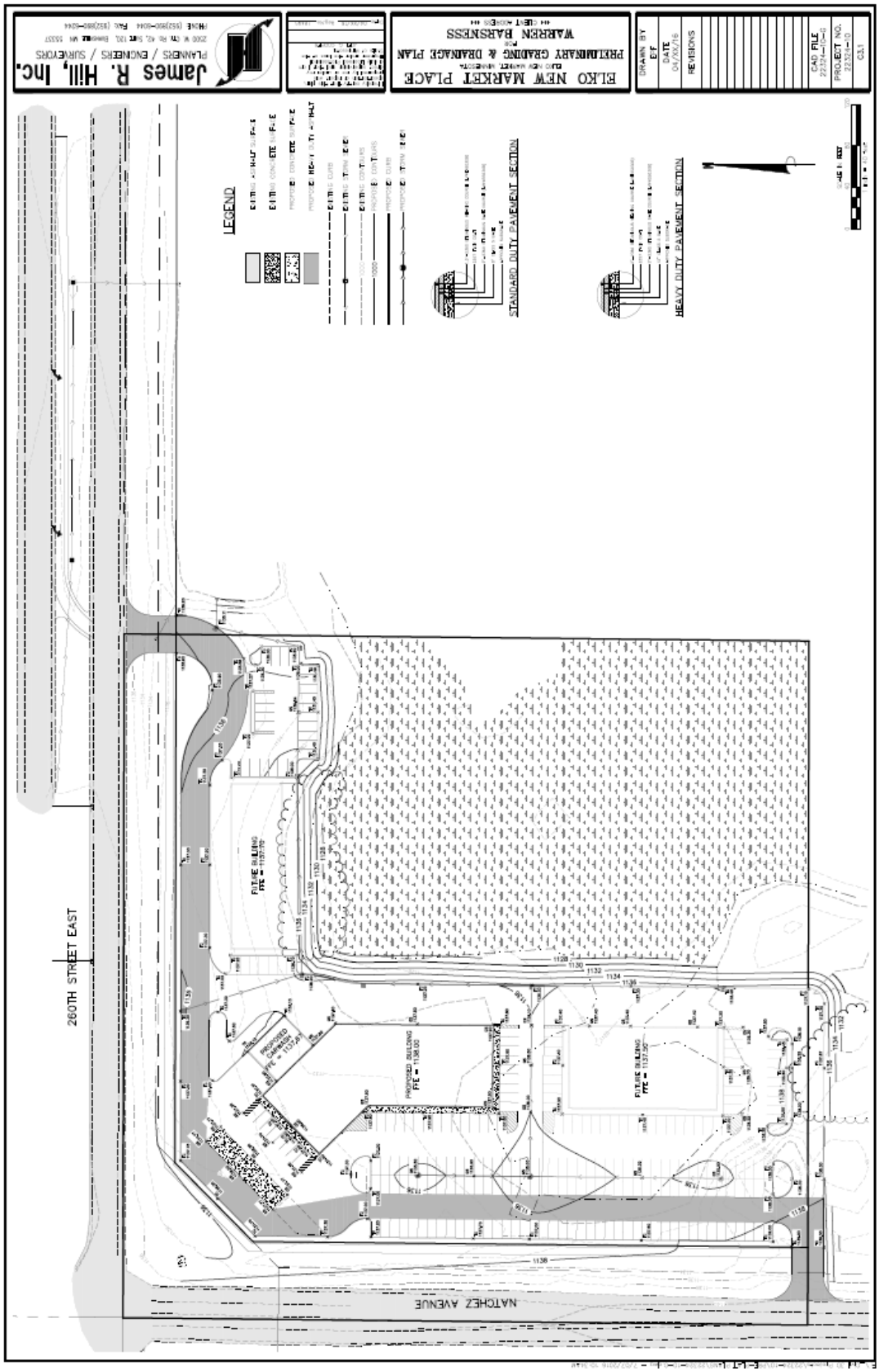
ELKO NEW MARKET PLACE
PRELIMINARY GRADING & DRAINAGE PLAN
WARREN BARSNESS
James R. Hill, Inc.
PLANNERS / ENGINEERS / SURVEYORS
DRAWN BY
E/F
DATE
04/04/16
REVISIONS
CAD FILE
PROJECT NO.
C3.1
LEGEND
STANDARD DUTY PAVEMENT SECTION
HEAVY DUTY PAVEMENT SECTION
260TH STREET EAST
NATCHEZ AVENUE
FUTURE BUILDING
PROPOSED BUILDING
PROPOSED CANOPY

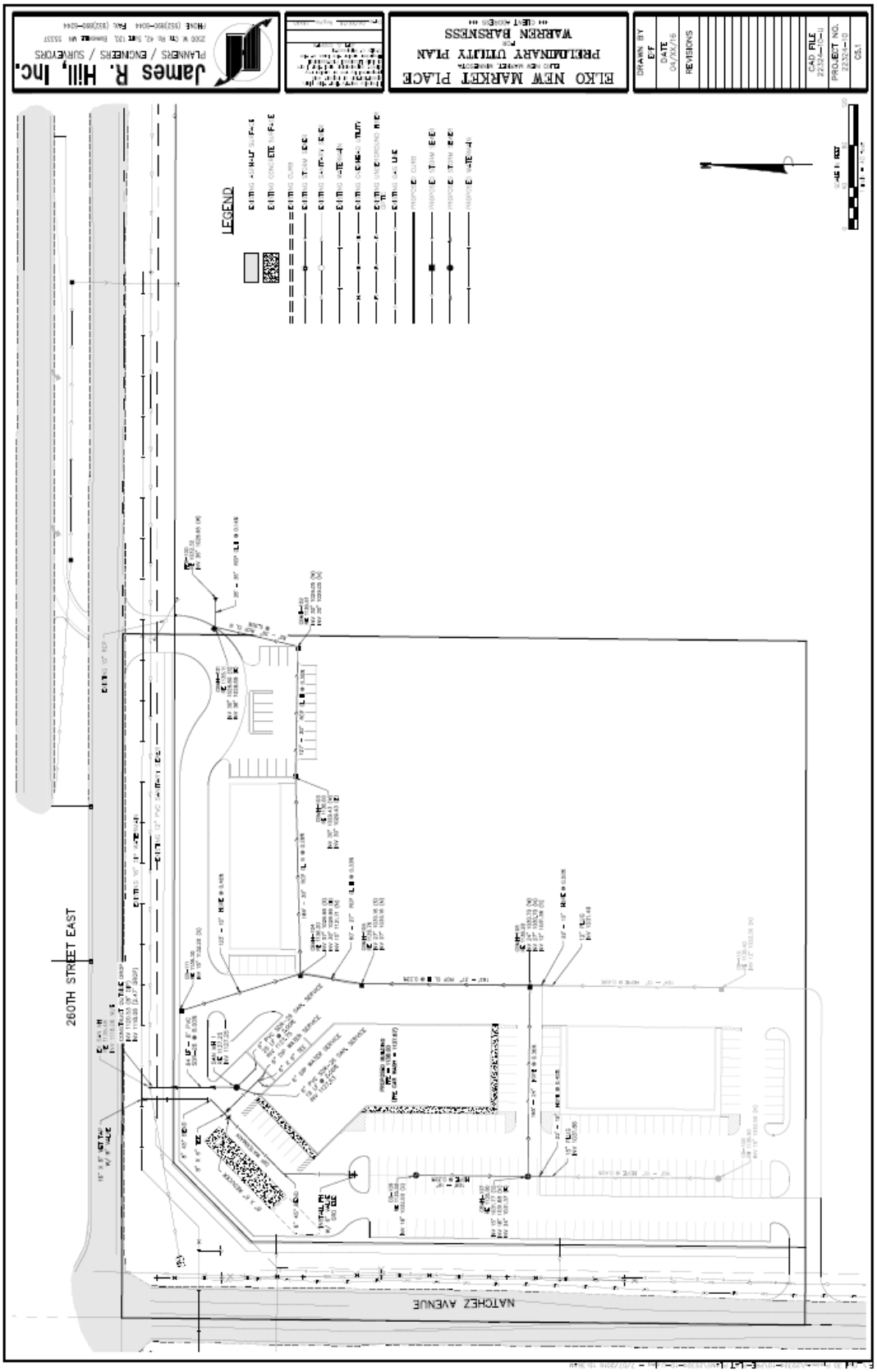
ELKO NEW MARKET PLACE
PRELIMINARY UTILITY PLAN
WARREN BARSNESS
James R. Hill, Inc.
PLANNERS / ENGINEERS / SURVEYORS
LEGEND
260TH STREET EAST
NATCHEZ AVENUE

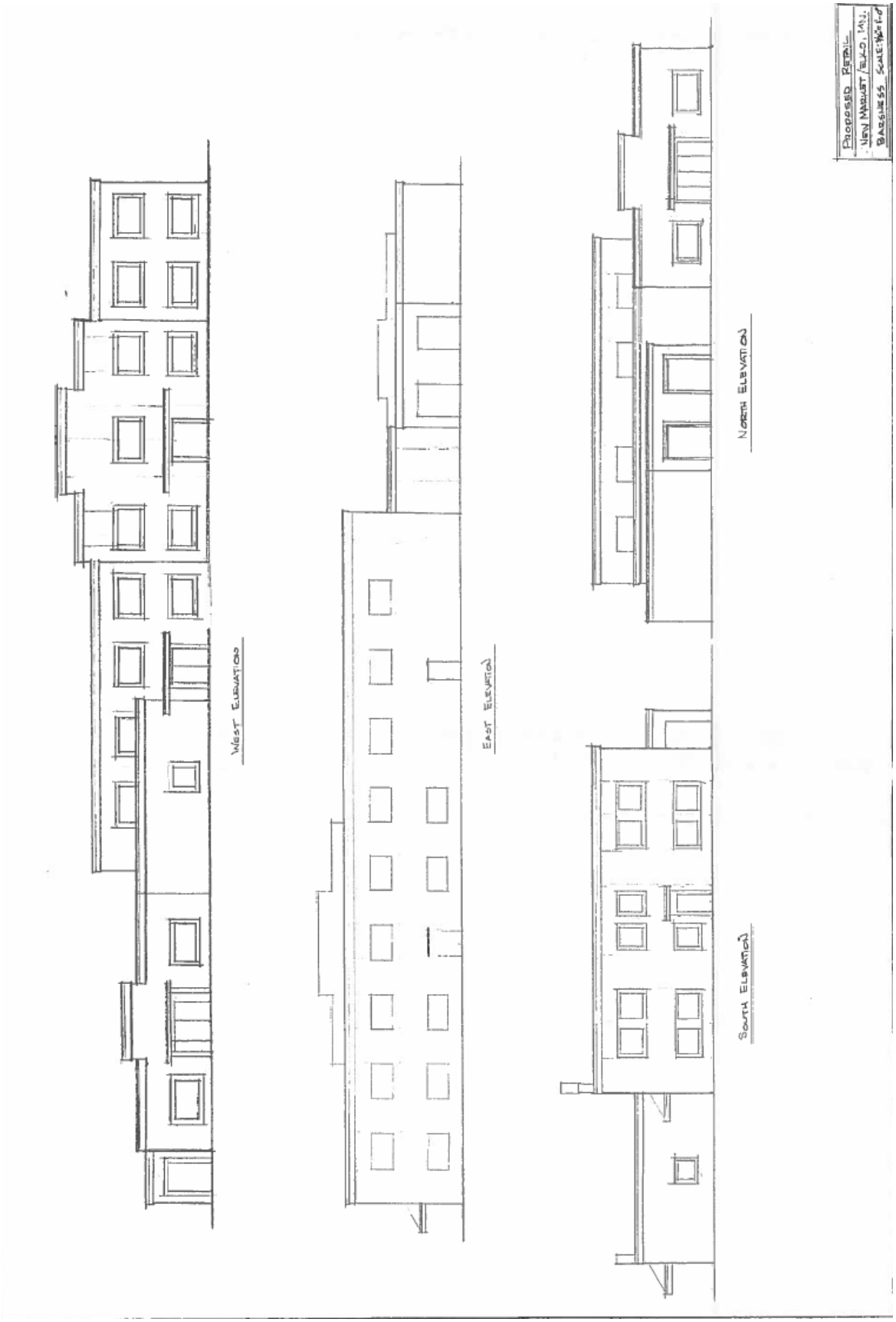
WEST ELEVATION
EAST ELEVATION
NORTH ELEVATION
SOUTH ELEVATION
PROPOSED RETAIL
NEW MARKET / BLDG. 1&2
BARSNESS SCALE: 1/8"=1'-0"

Renee Christianson

From: Rich Revering <richre@bolton-menk.com>
Sent: Monday, July 11, 2016 2:S1 PM
To: Renee Christianson
Cc: Tom Terry; Corey Schweich; 'Bob Kirmis'
Subject: RE: Barsness Project

Preliminary Engineering Comments

1. Transportation/Traffic
   a. CSAH 2 access is inconsistent with County Access Guidelines, submit to County Highway Department for review. Of particular concern:
      i. Left in movement from west-bound CSAH 2
      ii. Need for turn and acceleration lanes for right in/right out movement
      iii. Access may only be allowed if City street. Confirm, and show R/W limits accordingly.
   b. CSAH 91 access must be submitted to County Highwy Department for review. Of note:
      i. Turn lanes or turn and bypass lane may be required.
      ii. Access may only be allowed if City street. Confirm, and show R/W limits accordingly.
   c. A cul-de-sac or other acceptable means of turning around in public right of way will be required for the streets dedicated for providing access to County Highways or the street must run through the site.
   d. Streets dedicated to the City will require a two-foot subcut and select granular borrow subgrade with drainage in addition to the pavement sections shown.
   e. Final widths and configuration of any public streets created subject to review by Engineering and Public Works.
   f. Provide evidence of R/W, easement, or permission to build streets and disturb adjacent private property at proposed street accesses.
   g. The shared use path must connect to the easterly end of the CSAH 91 crossing on the southerly side of CSAH 2 in a manner reasonably accessed from users from the south or east.
   h. Call out handicapped accessible stall locations and access routes. Show ADA compliant grades, pavement markings, signage, and detectable warning system locations.
   i. City reserves due to anticipated traffic speeds and volumes the opportunity to review shared use path crossings of street connections to County highways for safety enhancements or realignments as access plans are reviewed.
2. Stormwater Management/Wetlands
   a. The existing culvert shown under the proposed street connection to CSAH 2 will need to be modified to maintain existing drainage patterns
   b. Stormwater routing to Scott County pond east of site:
      i. Permission for routing and possible facility modifications will be needed from Scott County.
      ii. Submit computations demonstrating pond (modified if necessary) is properly sized to meet City rate and runoff quality requirements in the code.
   c. No facilities or computations or analysis provided to demonstrate how City code requirements for runoff volume will be met.
   d. Call out the Ordinary High Water elevation of 1126.4 for the wetland.
   e. Call out the wetland boundary. Call out the proposed wetland limits and required 30-foot average width buffer (25-ft minimum).

f. Tabulate a summary of the wetland and buffer impacts and mitigation areas. A disturbed (created) buffer as shown is only allowed as part of an approved wetland replacement plan. This will be required at least for the buffer, in addition to any wetland banking credit purchase proposed.
g. Provide a narrative on why wetland and buffer impacts are necessary, and how wetland impacts were first avoided and then minimized to support the depicted impacts.
h. Provide a narrative discussing the potential for fuel spills to flow to the wetland and, if indicated, depict and provide facilities or devices to prevent such occurrences.
i. Provide sumps in site catch basins to capture larger sediments (particularly from winter sand/salt operations or load spills). These will require a maintenance agreement with the City to ensure sediments are routinely removed to prevent entry into the stormwater pond.

3. Sanitary Sewer
   a. Illustrate how future buildings will be served with sewer and how pavement cuts will be avoided.
4. Water Distribution System
   a. Fire Chief to review for fire code compliance.
   b. 8-inch water will need to be brought to south edge of site when future building and site hydrants built. Plan for and depict on drawings. Show water main through or along site in easement or R/W. Provide for City maintenance access via Development Contract or other instrument.

These plans are incomplete and the available review time was short; we will need to do a more thorough review when all required site plan information and reports are submitted. These comments are intended as advisory to the applicant as part of the DRT meeting and are subject to revision and expansion as more information becomes available.

Let me know if a formal memo is required. You have my consent to paste these into a master set of comments for distribution or to use as is.

Regards,

RR

From: Renee Christianson [mailto:rchristianson@ci.enm.mn.us]
Sent: Thursday, July 07, 2016 4:27 PM
To: Bob Kirmis <bkirmis@nacplanning.com>; Rich Revering <richre@bolton-menk.com>; Corey Schweich <cschweich@ci.enm.mn.us>; Tom Terry <tterry@ci.enm.mn.us>
Cc: Andrea McDowell Poehler <apoehler@ck-law.com>
Subject: FW: Barsness Project

All,

Attached are preliminary grading & utility plans we received this morning from JR Hill. I've also scanned and attached some architectural renderings that were dropped off. This project will be on the DRT agenda on Tuesday morning; please have comments available if possible. I realize these are very preliminary, and also very last minute, but any comments will be very much appreciated!

Respectfully,

Renee Christianson

City of Elko New Market | Community Development Specialist
601 Main Street | Elko New Market, MN 55054
Phone: 952-461-2777 | Cell: 612.644.3438 | RChristianson@ci.enm.mn.us

"E-mail correspondence to and from the City of Elko New Market may be public data subject to the Minnesota Data Practices Act and/or may be disclosed to third parties. This email message, including any attachments, is for the sole use of the intended

SCOTT COUNTY COMMUNITY SERVICES DIVISION

HIGHWAY DEPARTMENT · 600 COUNTRY TRAIL EAST · JORDAN, MN 55352-9339
(952) 496-8346 · Fax: (952) 496-8365 · www.co.scott.mn.us

August 8, 2016

Renee Christianson
City of Elko New Market
601 Main Street
P.O. Box 99
Elko New Market, MN 55054

RE: Commerical Concept Plan
CH 2 and CH 91

Dear Renee:

We have reviewed the concept plan for the site and offer the following comments:

- The plans are very prelimary and as such our review is preliminary. As further detail is provided other comments may be necessary.
- The concept proposes to use the County pond to discharge it's stormwater to. The County pond was developed under old stormwater requirements. If drainage is directed to the County pond, the existing pond would first need to be brought into compliance with current stomrwater standards. If the development desires a regional stormwater ponding approach, the County would need to be provided detailed stromwater information to understand the development's ability to utilize/expand the existing stormwater pond. Any stormwater plans and construction would be the development's responsibility.
- Infiltration is needed on the site that conforms with MPCA NPDES permit requirements.
- The County will permit a right-in/right-out on CH 2. The access on CH 2 requires a right turn lane.
- The concept shows a ¾ access on CH 2. The ¾ access would not be permitted. The left turn movement from CH 2 shall be conducted at the CH 2 and CH 91 intersection.
- Any access shall be required to be a public street. The public street does not appear to be identified on these plans.
- The access on CH 91 would require both a right turn lane and a left turn lane.
- Both CH 2 and CH 91 are Minor Arterial Roadways. The mimum right-of-way for minor arterial roadway is 75' from centerline. Additional right-of-way along CH 2 may be needed to provide for the required turnlane and taper. Detailed cross sections in this area showing the turn lane, trail, boulevard, etc are required.
- Any work within the County right-of-way shall require a County permit.

Thank you for the opportunity to comment. If you have any questions, please feel free to contact me.

Sincerely,

Craig Jenson
Transportation Planner

cc: Kate Miner, Traffic Engineer
Lisa Freese, Transportation Program Director

Preliminary Roundabout Design - Right-In/Right-Out

DRAFT - January 2018

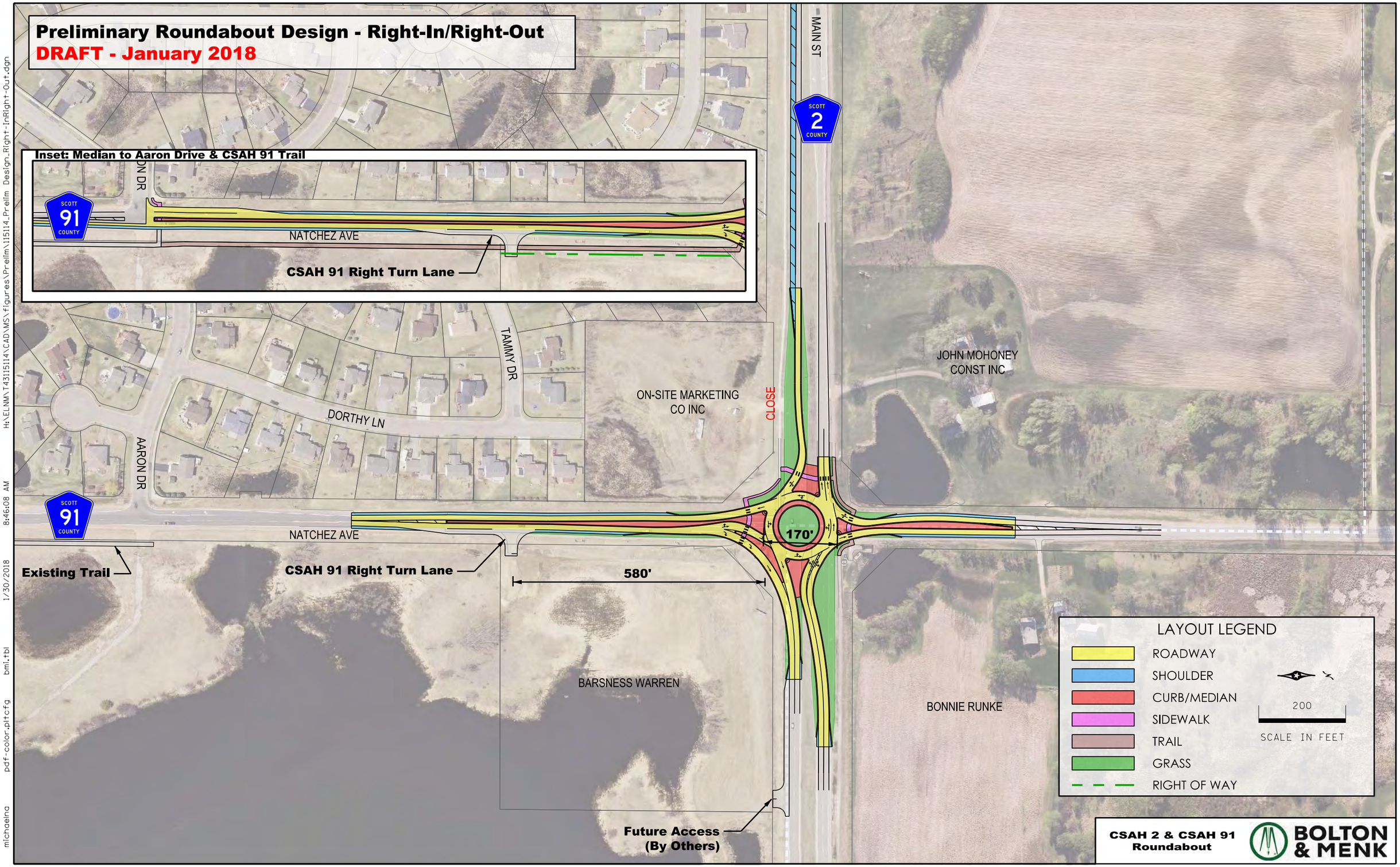

H:\ELNM\T43115114\CAD\MS\figures\Prelim\115114_Prelim Design_Right-InRight-Out.dgn 8:46:08 AM 1/30/2018 bmi.tbl pdf-color.pltcfg michaelna

Preliminary Roundabout Design - Channelized Left Turn

DRAFT - January 2018

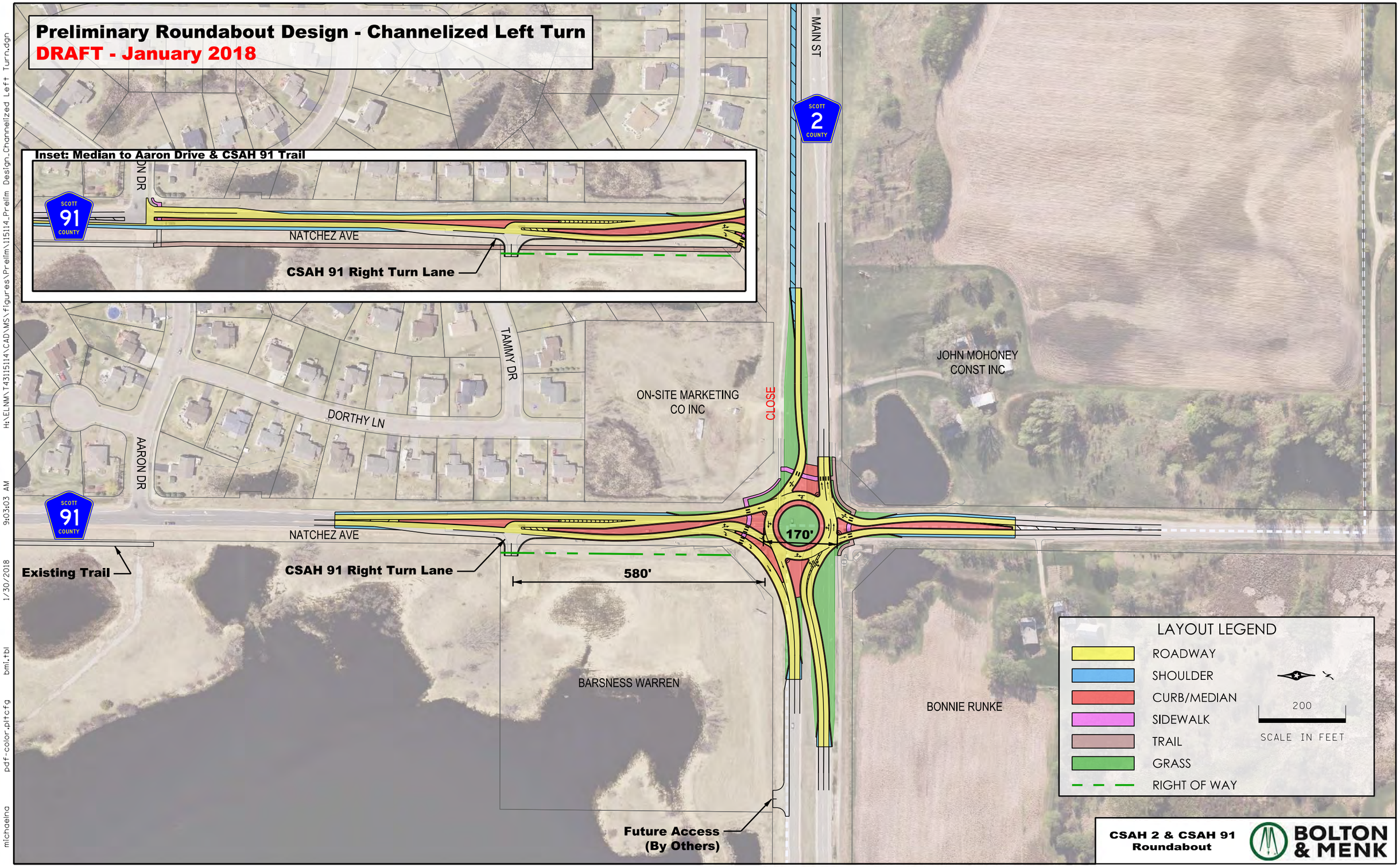

H:\ELNM\T43115114\CAD\MS\figures\Prelim\115114_Prelim Design_Channelized Left Turn.dgn 9:03:03 AM 1/30/2018 bmi.tbl pdf-color.pltcfg michaelna

SCOTT COUNTY COMMUNITY SERVICES DIVISION

HIGHWAY DEPARTMENT · 600 COUNTRY TRAIL EAST · JORDAN, MN 55352-9339
(952) 496-8346 · Fax: (952) 496-8365 · www.co.scott.mn.us

August 8, 2016

Renee Christianson
City of Elko New Market
601 Main Street
P.O. Box 99
Elko New Market, MN 55054

RE: Commerical Concept Plan
CH 2 and CH 91

Dear Renee:

We have reviewed the concept plan for the site and offer the following comments:

- The plans are very prelimary and as such our review is preliminary. As further detail is provided other comments may be necessary.
- The concept proposes to use the County pond to discharge it's stormwater to. The County pond was developed under old stormwater requirements. If drainage is directed to the County pond, the existing pond would first need to be brought into compliance with current stomrwater standards. If the development desires a regional stormwater ponding approach, the County would need to be provided detailed stromwater information to understand the development's ability to utilize/expand the existing stormwater pond. Any stormwater plans and construction would be the development's responsibility.
- Infiltration is needed on the site that conforms with MPCA NPDES permit requirements.
- The County will permit a right-in/right-out on CH 2. The access on CH 2 requires a right turn lane.
- The concept shows a ¾ access on CH 2. The ¾ access would not be permitted. The left turn movement from CH 2 shall be conducted at the CH 2 and CH 91 intersection.
- Any access shall be required to be a public street. The public street does not appear to be identified on these plans.
- The access on CH 91 would require both a right turn lane and a left turn lane.
- Both CH 2 and CH 91 are Minor Arterial Roadways. The mimum right-of-way for minor arterial roadway is 75' from centerline. Additional right-of-way along CH 2 may be needed to provide for the required turnlane and taper. Detailed cross sections in this area showing the turn lane, trail, boulevard, etc are required.
- Any work within the County right-of-way shall require a County permit.

Thank you for the opportunity to comment. If you have any questions, please feel free to contact me.

Sincerely,

Craig Jenson
Transportation Planner

cc: Kate Miner, Traffic Engineer
Lisa Freese, Transportation Program Director